The Dissertation Committee for Elizabeth Ann Florea Certifies that this is the approved version of the following dissertation:

Turning the Tables on Romance: Rustichello da Pisa Invents a New Chivalric Table in his Arthurian Compilation

Committee:

Guy Raffa, Co-Supervisor

Hannah Wojciehowski, Co-Supervisor

Douglas Biow

Daniel Birkholz

F. Regina Psaki

Turning the Tables on Romance: Rustichello da Pisa Invents a New Chivalric Table in his Arthurian Compilation

by

Elizabeth Ann Florea

Dissertation

Presented to the Faculty of the Graduate School of French and Italian

The University of Texas at Austin

in Partial Fulfillment

of the Requirements

for the Degree of

Doctor of Philosophy

The University of Texas at Austin

August 2017

Dedication:

To Mario, Mom, Paul, Jebb, Jasmin, and Nico.

Acknowledgements :

This dissertation could not have been completed without the support of my professors, collaborators, family, and friends. I am especially grateful for the constant encouragement, direction, and insight of Professors Guy Raffa and Hannah Wojciehowski. I send my profound thanks to Prof. F. Regina Psaki who offered invaluable suggestions on translation and brought to my attention many nuances of language and argumentation that I would not have discovered without her help. I would like to express my special thanks to Professor Fabrizio Cigni who took time out of his busy schedule teaching at the Scuola Normale di Pisa to discuss various aspects of Rustichello and his work in Summer 2015. This dissertation is greatly indebted to the previous work done by Prof. Cigni on Rustichello and also the phenomenal work of Amanda Luyster on the fresco cycle at St. Floret. Furthermore, I wish to convey my heartfelt appreciation to Professors Douglas Biow and Daniel Birkholz, both of whom offered great suggestions to improve upon this dissertation. I owe a great depth of gratitude to Prof. Michael Johnson who gave me the initial inspiration to write on Rustichello‘s Arthurian *Compilation*, and who was also extremely helpful with my Anglo Norman translations. Moreover, thanks to Prof. Geraldine Heng for the lively conversations on Marco Polo, Prof. Jean Holladay for queries about the art and images in the manuscripts, and Prof. Norris Lacy for providing insight on the placement of Rustichello in the Arthurian tradition. I would also like to thank the office and staff of the Department of French and Italian who attempted to keep me on track and motivated. I am especially indebted to the Graduate Coordinator(s) Michael Schmidt and his predecessor, Katherine Jaroschy for their excellent organizational skills. Additionally, I send a humble thanks to the University of Texas Graduate School, Department of French and Italian at

the University of Texas, Texas Language Center, and the Department of Medieval Studies at the University of Texas (especially Prof. Liz Scala), all of which provided the necessary funding for research and the completion of this dissertation. Likewise, I wish to thank the Mellon Summer Institute in Italian Paleography at the Getty Research Institute for their financial support, and particularly Dr. Maddalena Signorini who taught me the rudiments of paleography, Summer 2014. Similarly, many thanks to Mme Frédérique Havette who opened up the château at St. Floret and answered my many question about the fresco cycle there on my research trip in the Auvergne, in Summer 2015. Lastly, thank you for the continuous support of my dearest friends: Wendy, Mirka, Paolo, Alessio, Marie and Luciano, Chiara, and Claude.

Turning the Tables on Romance: Rustichello da Pisa Invents a New Chivalric Table in his Arthurian Compilation

by

Elizabeth Ann Florea, Ph.D.

The University of Texas at Austin, 2017

Co-Supervisors: Guy Raffa and Hannah Wojciehowski

Abstract

Rustichello da Pisa, the thirteenth century Italian compiler of Arthurian romance and later the co-author of Marco Polo's *Milione* (1296-1299), is usually only a footnote in the anthologies of Italian Literature. Yet his Arthurian *Compilation* was still being reproduced over four hundred years after his death. In 1272-73 Rustichello wrote his Arthurian *Compilation* from a book (*dou livre*) in the collection of King Edward I of England. This work is the first known Arthurian prose romance written by an Italian in the literary language known as Franco-Italian.

The *Compilation* begins with Rustichello's original episodes of Branor le Brun and then proceeds to extrapolate sections of other French romance texts. Yet it is the Branor le Brun episodes, the original story invented by Rustichello, that has pride of place at the beginning of the *Compilation.* Thus, although Rustichello copied much of his *Compilation* from other works, he was also an original and innovative author and should be remembered as such. Hence, this dissertation will offer a topical reading of the original episodes of Branor le Brun found in Rustichello da Pisa's Arthurian *Compilation.* Furthermore, I will draw out the influence of these original episodes—political, literary, and, in one case, visual—in and beyond Italy.

Table of Contents:

List of Tables:

List of Figures:

Introduction

"Meglio un morto in casa che un Pisano all'uscio"
'Che Dio ti accontenti!"[1]

"Better a death in the house than a Pisan on the doorstep" is a medieval proverb that epitomizes the communal conflict in north-central Italy in the late thirteenth and early fourteenth centuries. This proverb probably originated from the Guelph commune of Lucca, which hated Pisa because it regularly raided Lucca's territories. Pisa was always a staunch Ghibelline supporter and a powerful maritime merchant republic that controlled many of the internal trade routes in Italy, and also in the East. Pisa's power at sea and Ghibellinism created great animosity toward Pisa both locally and globally. Locally the Guelph city-state of Florence disliked Pisa for its traditional Ghibelline party politics. Furthermore, landlocked Florence envied Pisa's port because it was dependent on Pisan and Genoese ships to transport its trade goods and had to pay (at times) exorbitant import/export taxes to Pisa. However, nearby Genoa was Pisa's worst enemy, but mainly for commercial reasons. Genoa oscillated between Ghibelline and Guelph party politics, favoring whichever side could commercially benefit it most. Genoa had great animosity toward Pisa because it threatened Genoa's economic livelihood: Pisa regularly raided Genoese merchant ships, threatened Genoa's landholdings in Italy and the Tyrrhenian Sea, and competed with Genoa for trade rights in the East. Thus, on a local level, Genoa and other Italian city-states and republics were against Pisa for commercial reasons, though sometimes politics further complicated strained relationships with the Pisan Republic.

---

[1] Author Unknown: medieval saying or "detto." In his article, Sergio Caruso gives the origins of this saying and its regionalistic implications in Italy. Although this saying is often attributed to Dante, it was probably first said by a Lucchese. In the many local rivalries in Italy, Lucca hated Pisa because Pisa was constantly raiding Lucca and its surrounding territories. S. Caruso, "Montapertismo, malattia toscana, rivalità secolari condite da sfottò,"*Corriere Fiorentino,* (Florence, Italy), Aug. 31, 2008, http://corrierefiorentino.corriere.it/politica/articoli/2008/08_Agosto/29/battaglia_montaperti_toscana.html

Pisa's constant imperial (Ghibelline) rather than papal (Guelph) allegiance made it one of the few Italian city-states in Tuscany that backed the emperor rather than the Pope. Many of the city-states surrounding Pisa were legitimately leery of opposing the Pope, and more so, his powerful foreign allies. In the thirteenth century, the main foreign contenders fighting over portions of Italy were the German Hohenstaufen and the French Capetian house of Anjou. When the Hohenstaufen were defeated by the French in 1268, the Aragons of Spain claimed rights to Sicily through Manfred's surviving daughter, Constance of Sicily, who was married to Peter III of Aragon. France lobbied for papal sanctions to approve its legitimate reign in Italy, and brought its armies into the peninsula to thwart the German Hohenstaufen. The Hohenstaufen often launched their attacks on southern Italy from Pisa, for Pisa was in a sense the Ghibelline capital of the peninsula. Pisa was not the only Tuscan city with regional conflicts; it did have the support of the German emperors. However, these foreign conquerors were often too busy with their own wars and skirmishes in Italy to help Pisa when local Italian Guelph city-states rose up against it. Almost everyone disliked Pisa because of its trade position in the Mediterranean and its independent nature. Pisa's political-economic singularity was the root of a profound "solitude," and this "solitude" also applies on a literary level to one of Pisa's greatest authors, the romance writer Rustichello da Pisa.[2]

To most, Rustichello da Pisa is only a vague echoic memory that has something to do with Marco Polo's *Milione* (1296-1299). However, at least twenty years before his co-authorship with Marco, Rustichello wrote and compiled Arthurian romances (1270-1295). Rustichello's main contribution to romance is his original story of an old and venerable knight, called Branor le Brun. After the prologue, the Branor episodes are the first in Rustichello's *Compilation*, and

[2] Pisa's historic isolationist position is amply demonstrated in Rudolf Borchardt's *Pisa, solitudine di un impero*, trans. It. (Pisa: Lischi-Nistri, 1965), 1-33.

these were the episodes most reproduced from it until well into the sixteenth century. Nonetheless, today Rustichello da Pisa remains an obscure author relegated to the footnotes and endnotes in anthologies of Italian Literature-- if he is mentioned at all.[3] Despite modern perceptions of Rustichello, his work was able to permeate different mediums, cultures, social classes, and time periods. This textual mobility gives credence to a literary legacy that is inconvenient and usually not even mentioned in the studies on early Italian Literature. Hence, this dissertation will offer a topical reading of the original episodes of Branor le Brun found in Rustichello da Pisa's Arthurian *Compilation,* and it will draw out the influence of these episodes—political, literary, and, in one case, visual—in and beyond Italy.

There are essentially two reasons why Rustichello is ignored by modern readers. First, the language in which he wrote: Franco-Italian; and second, the genre in which he wrote: Arthurian prose romance. (We will first discuss language and then proceed to the discussion on genre with some overlap, as these topics often cannot be mutually exclusive.) Franco-Italian, as the name suggests, is a variant of the French language written by Italians. It is not strictly speaking a standard French, but instead is a French-like language laden with syntactic and stylistic elements, and Italianisms that bespeak the Italian origins of its writers. Thus, Franco-Italian inhabits a gray area on the language spectrum because it is not exactly French, but it certainly is not Italian either. Romanist Gunter Holtus defines "Franco-Italian" as a designation for a fairly determinable group of manuscripts written by Italians in the French language, which imitates French models found mainly in northern Italy and dates from the second half of the

[3] In Gianfranco Contini's standard anthology of early Italian Literature, there are many translations of texts from Latin to Italian, but no translation from Franco-Italian to Italian. Contini states that writers in Franco-Italian used a "scorrettissimo francese" or "worst French," and these texts are excluded in his anthology. See G. Contini, *Letteratura Italiana delle origini* (Milano: Sansoni Editore, 1994), 10.

thirteenth to the fourteenth centuries.[4] As indicated by his last name "da Pisa" or "from Pisa," Rustichello was from north-central Italy, writing in the late thirteenth century, and writing in a French-like language both his Arthurian *Compilation* and the *Milione.*

At this time, many Italian authors were writing literary works in variants of French instead of in Italian dialects. As literary scholars Ad Putter and Keith Busby point out, the use of Franco-Italian was "an 'artificial' phenomenon" because French was not the native language of its writers, and usually not of their patrons either. Hence, these Italian writers essentially labored to write in a non-native language perhaps due to their "desire to be fashionable," as Putter and Busby indicate, but also it seems there were other more salient reasons why these authors chose to write in Franco-Italian.[5]

In the thirteenth century, France was the richest and most populous nation in Europe, and it had a fairly stable monarchy. The noble class was firmly established, and the French were associated with high culture in Europe. The aristocrats of France imported luxury goods, and their tastes influenced the cultural products of other European countries. Most merchants with whom the French traded spoke a form of French, and French was still the official language of the law courts and the upper classes in England too. The French "tended to set the standard for the rest," hence it is not unusual that Rustichello da Pisa would want to write in a French-like language so that his work would have more commerce.[6] However, Italy lacked certain genres of literature written by native authors, such as Arthurian prose romance. Hence, it was logical for

---

[4] "Franco-Italiano" serve come denominazione per un corpus relativamente determinabile di manoscritti redatti da italiani in lingua francese, in parte con l'intenzione di imitare i modelli francesi e in parte per esaltare una propria personalità più o meno volute, prevalentemente nell'area nord-italiana ed essenzialmente nella seconda metà del XIII e nel XIV secolo." See Gunter Holtus, "Che cos'è il franco-italiano?" in *Guida ai dialetti veneti X,* ed. Manlio Cortelazzo (Padova: Cleup, 1988), 8.

[5] Ad Putter and Keith Busby, "Introduction," in *Medieval Multilingualism: The Francophone World and Its Neighbours,* ed. Christopher Kleinhenz et al. (Turnhout, Belgium: Brepols, 2010), 11.

[6] See Nicholas Ostler, *Empires of the Word: A Language History of the World* (New York: Harper Perennial, 2006), 407.

Rustichello to adopt the stories and the language of his famous French romance predecessors such as Chrétien de Troyes, Luce de Gat, Robert de Boron, and Helie de Boron, to name a few.[7] The first romance to be written by an Italian in Italy was Rustichello da Pisa's *Compilation*, but we must first look at the earlier tradition of romance that began in France to understand what Rustichello borrowed from his French romance predecessors when he wrote his Arthurian romance. Yet even the term "Arthurian romance" or works on the "Matiere de Bretagne" or "Matter of Britain" are false nomenclatures.

In fact, tales about the 'Matter of Britain' usually have very little to do with King Arthur but more to do with auxiliary knights who are in some ways associated with the Round Table at Camelot.[8] Geoffrey Monmouth's *Historia Regum Britanniae* in Latin is a pseudohistorical account of the history of Britain written in 1136. Monmouth's work was soon translated into French by Wace in his *Roman de Brut* (1155). Wace's work in French then became the main sourcebook for romance works centering on the 'Matter of Britain.' It was not long after Wace wrote the *Brut* that Chrétien de Troyes started to write his Arthurian romances in verse (*ca.* 1170-90). Furthermore, since many of Chrétien's romances were left unfinished, there was ample room for later adaptations and redactions of them in other countries and languages.[9]

The works of Chrétien are the earliest surviving Arthurian romances, and he was the first author to write a romance on the 'Matter of Britain' in his *Conte du Graal*, also known as the

---

[7] These are the romance authors mentioned in Rustichello's epilogue found only in BnF MSS fr. 340 and 355.

[8] Norris J. Lacy, "Matière de Bretagne," in *The New Arthurian Encyclopedia* (New York: Garland Publishing, Inc., 1991), 315. Likewise, "Bretagne" or "Britain" is not a particular location in the romance tradition, but could also apply to Brittany in France.

[9] N. Lacy notes that because the *Perceval* was left unfinished and the interest in Grail material was great, many medieval writers wrote sequels to this work. N. Lacy, "French Arthurian Romance," 160 and "Chrétien de Troyes," 88-91 in Lacy's *New Arthurian*.

Conte du Perceval in the late twelfth century.[10] What changed with Chrétien's work is that he made other knights the heroes of his stories, and gave King Arthur a passive or at least ineffectual role in them. Chrétien also formulated the "episodic romance," which gives brief stories without a linear sequence of events over a specific time period and does not have a continuous plotline. These stories suggest relationships between unrelated themes through the technique of interlacement or the "knitting together" of disparate stories, but often it is difficult to find a unifying thread that links these stories together.[11] Furthermore, this technique is unsettling to modern readers because we cannot detect the subtleties in meaning that medieval audiences would have easily understood. Unfortunately, as modern readers we simply lack the cultural and historical knowledge that a contemporary audience had, and hence, we cannot fully understand the many nuances of these romances. To us, a romance character seems to be flat, psychologically shallow, and for some reason, continuously goes on pointless quests. But as historical materialist Frederic Jameson has demonstrated, we must always weigh the individual form romances take in relation to their specific historical and ideological contexts in order to even attempt an understanding of these stories.[12] To a medieval reader, these characters and their actions relayed social, moral, geographic, economic, and political meanings which are often hidden to us. The authors of stories in the Arthurian Prose Cycle strove to achieve a "feeling that there is no single beginning and no single end," and the resulting long, complex, and at time repetitive romances, although not appealing today, were vastly popular until at least the sixteenth century.[13] Moreover, after the success of Chrétien's work in France, it soon gained popularity,

---

[10] This tale was written in 1170-1190 and gives the first acknowledgement of the Holy Grail. The tale begins with the story of the knight Perceval but then breaks off to tell the story of Gawain. See Norris J. Lacy's entry for "French Arthurian Literature (Medieval)," in *New Arthurian,* 160-62.

[11] Eugène Vinaver, *The Rise of Romance* (New York: Oxford University Press, 1971), 68.

[12] Frederic Jameson, "Magical Narratives: Romance as Genre," *New Literary History* 7 no. 1 (1975): 155-6.

[13] Vinaver, *The Rise,* 68.

and versions of his romances spread to Germany, Scandinavia, Italy, and Spain before Arthur and his "matter" could return back to England.

There are no known works on the "Matter of Britain" by Italians until Rustichello's *Compilation* in the late thirteenth century. Nonetheless, there was knowledge of romance characters in Italy by at least the late twelfth century. Rustichello, much like Brunetto Latini, Martin da Canal, and other thirteenth-century authors from northern Italy, wrote in French or the French-like literary languages known as Franco-Italian which had several variants. These authors wrote in French or a version of French because often what they were writing had no Italianate model, and also they (for reasons previously discussed), would have a larger audience if they wrote in French. Furthermore, perhaps their works, especially romances, would have more "weight" if they were in the language of their illustrious romance forefathers such as Chrétien.[14] Because there are frequent references to Arthurian romance characters in Italy, it is apparent that people were reading them, and most likely reading them in French.

Henricus of Settimello (near Prato) was the first Italian author to reference a romance character, in a Latin poem dated 1193. Henricus compared his sadness to that of the romance character Tristan, and hence, we know that at least some version of the Tristan romance was circulating in Italy by at least the late twelfth century. The first mention of a romance work in Italy is recorded in 1240 when the Emperor Frederick II wrote a thank you note to one of his court functionaries. In this missive, Fredrick thanks this man for sending him a copy of a work known as the *Palamedes* (presumably in French).[15] In 1266, Brunetto Latini, writing from France and in Old French gave a description of Iseult in his *Li Livres dou Trésor*. Likewise, the first

[14] Depending on the region in which a given work was written, Franco-Italian can also be known as "Franco-Venetian" or "Franco-Lombard."

[15] The *Guiron le Courtois* is also known as the *Palamedes* in the literature. Edmund Garratt Gardner, *The Arthurian Legend in Italian Literature* (London: J.M. Dent & Sons, 1930), 44.

Italian city chronicle was in the vulgar tongue of Franco-Venetian and entitled the *Estoire de Venise*, written by Martin da Canal (1267-1275). Da Canal's work is not a romance like Rustichello's *Compilation*, but historian John Larner states that it "portrays contemporary life as a feudal pageant in which jousting and chivalric prowess stand at the centre of attention."[16] In fact, Larner notes that the city of Venice used the *Estoire* as a form of "government propaganda," touting the greatness of the city and explaining everyday events happening there in "epic forms."[17] But what exactly distinguishes medieval epic from romance is a slippery slope. Literature comparatist Barbara Fuchs writes that "we read epic as an account of warfare leading to the birth of a nation focused on a martial hero who represents the group," with the classic example of Virgil's *Aeneid* given.[18] On the other hand, Fuchs elaborates that "romance appears instead as a detour or wandering from the teleological thrust of epic, characterized by circularity or stasis and by the seductions of eros and individual adventures."[19] I argue that Rustichello combines elements of both romance and epic when he wrote his original episodes of Branor.

Rustichello explained his own political reality in "epic forms" with his martial hero Branor representing the political desires of the Ghibelline prisoners held captive in Genoa. Furthermore, Rustichello wrote "romance forms" in the compiled sections of his *Compilation* when he relays the tales of other wandering knights such as Lancelot, Tristan, and Palamedes, to mention a few. Rustichello's mixing of "romance" and "epic" is not unlike how other French and Franco-Italian authors used romance characters and forms in their own works. Latini, da Canal, and Rustichello were all contemporaries, and all wrote either on romance characters or in

---

[16] John Larner, *Italy in the Age of Dante and Petrarch 1216-1380* (London and New York: Longman, 1983) 101.
[17] Ibid., 101.
[18] Barbara Fuchs, *Romance* (New York, NY: Routledge, 2004), 13.
[19] Ibid., 13.

romance forms in French or French-like language. Moreover, all these authors, despite their genre, were vastly popular in their day.

Even Italy's most famous medieval writer, Dante Alighieri, would never have questioned Rustichello's choice of the French language when writing on King Arthur or the "Matter of Britain." This fact is evidenced in his *De Vulgari Eloquentia* when Dante states:

> thus the language of Oïl adduces on its own behalf the fact that, because of the greater facility and pleasing quality of its vernacular style, everything that is recounted or invented in vernacular prose belongs to it: such as compilations from the Bible and the histories of Troy and Rome, *and the beautiful tales of King Arthur*, and many other works of history and doctrine. (*De Vulg. Eloq.* Book I, 10.2).[20]

Dante would later promulgate his own vernacular Italian, but it seems that at one time he was not against the use of other "foreign" vernaculars when telling "a beautiful tale of King Arthur." Thus, it seems that Dante would have approved of Rustichello's adoption of Franco-Italian when telling the tales of great Arthurian kings and knights in his *Compilation*. Nonetheless, it is not only the language that excludes Rustichello from the literary canon, but the genre and perceived quality of writing also eliminate him from literary histories.

As Larner succinctly puts it: "the genre itself [Arthurian thirteenth-century prose narrative], has not been much admired."[21] This lack of interest in romance is mainly due to the prolixity and non-linear sequence of events making these works seem like "accumulations of

---

[20] Words in italics are my emphasis. The Latin is as follows: "Allegat ergo pro se lingua *oïl*, quod propter sui faciliorem ac delectabiliorem vulgaritatem quicquid redactum sive inventum est ad vulgare prosaicum, suum est: videlicet Biblia cum Troyanorum Romanorumque gestibus compilata et Arturi regis ambages pulcerrime et quam plures alie y storie ac doctrine," in *Il trattato De Vulgari Eloquentia per cura di Pio Rajna* (Firenze: Le Monnier, 1896), 50.

[21] John Larner, *Marco Polo and the Discovery of the World (*New Haven and London: Yale University Press, 1999), 56. Also in Margaret Anne Doody's *The True Story of the Novel* (New Brunswick, NJ: Rutgers University Press, 1996) *passim*, she makes a similar observation on how the genre of romance has often been considered unworthy of literary merit.

stories," which are "without shape or substance."[22] Likewise, in this genre, Rustichello "has always been treated as an inferior master," probably due to his technique of compiling, which today is considered unoriginal and akin to plagiarism (although it was quite common in the Middle Ages and also in the Renaissance).[23] But what Larner and most other scholars fail to note, is that Rustichello was writing Arthurian romance before anyone else in Italy, and that his "romainz" influenced future Arthurian and chivalric romances produced there and throughout Europe even hundreds of years after his death.

Renowned Italian scholar Vittore Branca wrote that "the *Milione* could be considered the first book *ever* written by an Italian before the *Divina Commedia*."[24] Branca forgets that Rustichello wrote Arthurian romance at least twenty years before writing with Marco Polo. Since the *Compilation* is the first known Arthurian romance *ever* written by an Italian, perhaps *it* should also be considered the first Italian book, and most certainly Italy's first romance. As medieval historian M. T. Clanchy and many other scholars have noted, the word "romance" can have a plethora of different meanings both literary and linguistic.[25] I will be using the following definition of "romance" from *Oxford English Dictionary*: "A medieval narrative (originally in verse, later also in prose) relating the legendary or extraordinary adventures of some hero of chivalry. Also in extended use, with reference to narratives about important religious figures."[26]

---

[22] Vinaver, *The Rise*, 69-70.

[23] Larner, *Marco Polo*, 56.

[24] See Maria Bellonci's *Marco Polo* (Paris: Mengès, 1982), V. In this source, Vittore Branca states, "È il *Milione*, il primo libro di un italiano prima della *Divina Commedia*."

[25] M.T. Clanchy, notes that 'roman' or 'Romanic' was first used to distinguish between Latin and its various spoken forms. Latin sufficed for writing, but 'Roman' or 'romance' languages had so many forms that it was thought extremely difficult. "The writing down of French 'romance' literature was so successful and pervasive; however, the description 'romance' was applied to the content of this literature, as much as to the language in which it was expressed. 'French' to distinguish from 'romance' literature was not used until at least the thirteenth century." M. T. Clanchy, *From Memory to Written Record: England 1066-1307* (London: Blackwell Publ. Ltd., 1993), 216-17.

[26] "romance, n. and adj.1". OED Online [*Oxford English Dictionary*]. June 2017. Oxford University Press. http://www.oed.com.ezproxy.lib.utexas.edu/view/Entry/167065?rskey=sbSgrO&result=1 (accessed July 17, 2017).

The *Compilation* is a long and complex invented prose narrative that tells the adventures of many different heroes from both the "New" Table or Round Table Knights and also has tales about "Old" Table of Knights or the knights of Uther Pendragon's generation. Hence, the real reason why he did this was to reconcile the stories of the Old and New Tables. Rustichello's genius was in his fusing together of the two tables: a demonstration of his great ability as an original author and also his knowledge of the romance tradition. The difficulty for modern readers lies in the fact that there does not seem to be any connections between the sequence of events in the *Compilation*. In the modern and technological world in which we live, internet and smartphones are almost always within reach. We ask any question and get immediate answers and instant gratification to our queries. This is not how medieval romances were written. It takes hundreds of episodes to provide the answers we seek and often a favorite character or plotline never reappears. Present-day audiences are used to watching their favorite television series end with a dramatic cliffhanger. However, we are comforted with the knowledge that in the next episode, the cliffhanger from the previous one, will be resolved. Medieval audiences who listened to, read, or watched performances of episodes from romances did not have the security that these romances would end well or even recommence from where they left off. The addition of many continuations of romance texts suggests that what medieval audiences craved was not endings but unending stories.

It seems that what promulgated the writing of these new tales were changes in the education and learning system, the reading of Latin authors, and the exchange of popular tales.[27] Literary scholar Eugène Vinaver points out that the thirteenth-century prose writers who expanded upon Arthurian romances tried to make their narratives more meaningful by giving

[27] W.P. Ker, *Epic and Romance; Essays on Medieval Literature* (New York: Dover Publications, 1957), 325.

them a "causal perspective."[28] This "causal perspective" consisted less in explaining the action of the story and more in forging significant links between what were originally independent episodes. However, this made it difficult to discern the separate nature of the stories and whether or not these stories were about the new generation of knights from Arthur's Round Table or the old generation of knights from the time of Uther Pendragon.[29] That is to say, there is so much overlap and mixing of the tables and stories, it is difficult to discern where an "Old" Table story ends and where a "New" Table or Round Table story begins.[30]

Tristan was also considered a Round Table Knight and his fights and reconciliations with Lancelot and Iseult became immensely popular in the thirteenth century, especially in Italy. Christopher Kleinhenz states that "the interest in the Matière de Bretagne was great in Italy,"[31] but it seems that the *Tristan en prose* was the story most loved and reproduced here in the thirteenth century.[32] Likewise, in the *Compilation,* there are entire sections of the *Tristan en prose* transcribed in it with only slight modifications. Furthermore, Rustichello ends the oldest version of his work (BnF f.fr. 1463) with a scene from the *Tristan en prose,* Tristan's death. When Tristan, the best knight of the New Table, dies at the end of the *Compilation,* and the best

---

[28] Vinaver, *The Rise,* 68.

[29] "The 'Vulgate' Cycle (also called the Lancelot-Grail Cycle or Pseudo-Map Cycle), one of the literary monuments that mark the shift from verse to prose in the writing of Arthurian romance" (1215-1235). The Post-Vulgate Cycle is "a rehandling of the Vulgate Cycle of Arthurian prose romances composed between 1230-1240 by an anonymous writer but attributed to Robert de Boron." The Post-Vulgate, written probably between 1230 and 1240, is an attempt to create greater unity in the material, and to de-emphasize the secular love affair between Lancelot and Guinevere in favor of the Quest for the Holy Grail. It omits almost all of the vulgate's Lancelot proper section, making it much shorter than its source, and directly condemns everything but the spiritual life. It does not survive complete, but has been reconstructed from French, Castilian Spanish, and Portuguese fragments. Fanny Bogdanow, "Post-Vulgate Cycle," in *New Arthurian,* 364-366. See N. Lacy, *New Arthurian,* 496-99 [Vulgate] and 364-66 [post-Vulgate]).

[30] Also, although originally the character of Tristan was not a Round Table Knight or even part of the Arthurian cycle, by the second quarter of the thirteenth century, when the prose cycle of Arthurian romance became popular, Tristan became a Round Table Knight.

[31] Christopher Kleinhenz, "Italian Arthurian Literature," in *A History of Arthurian Scholarship,* ed. Norris J. Lacy (Cambridge: D.S. Brewer, 2006), 191 and also Christopher Kleinhenz's entry on "Italian Arthurian Literature" in N. Lacy, *New Arthurian,* 245-247.

[32] *Le Livre du bon chevalier Tristan de Leonois (Tristan en prose)* was composed in the second and third quarters of the thirteenth century and attributed to Luce de Gat (first part) and Hélie de Boron (second part).

knight of the Old Table, Branor le Brun dies at the beginning episodes of this work, there is in a sense a beginning and an end to Rustichello's *Compilation*. Since the greatest knights from both tables are now gone, it seems that with their deaths, all of chivalry has died as well.[33]

These tales from romance works were vastly popular in Europe until at least the sixteenth century. Romances appealed to various audiences because they blended both historical and fantastical elements. Although romances were originally intended for the aristocracy, and Chrétien most likely wrote for a courtly or aristocratic audience, this was not the case in Italy. Medievalist Jean Frappier made the distinction between "courtly" versions of romance (*version courtoise*) and more "common folk" versions of romance (*version commune*), which gained popularity after the twelfth century.[34] Since romance was not exclusively for the aristocracy in Italy, the lower classes of Italian society soon began to enjoy Arthurian romances as sung by troubadours and traveling *cantastorie.* It seems that the romancers of the thirteenth century capitalized on their varied audiences, which was especially applicable in Italy where Arthurian romances were not usually found in courtly settings, but instead in the newly formed city-states.

In Italy, the booming trade markets and the growth of universities allowed "new men" into the workforce, and these "new men" could now study at university and become scribes, notaries, clerks, and various court functionaries. Many of these "new" men or *homines novi* also wrote literary works.[35] The majority of the new male authors in the thirteenth and fourteenth

---

[33] Parenthetical references are all from BnF MS fr. 1463 edited by Fabrizio Cigni in his *Il Romanzo Arturiano* (Pisa: Cassa di Risparmio di Pisa, 1994). Episode numbers and line numbers are cited as follows*: Il Romanzo* 1(episode):1(line number), i.e., 1:1. Other material from Cigni's text will be as such: Cigni, *Il Romanzo*, and then the pertinent page number. Unless otherwise indicated translations are my own.
Here, *Il Romanzo*, 235:7 Rustichello writes: *"Puis que le buon Tristan est morz, toute chevalerie est morte"* ("now that Tristan is dead, all of chivalry is dead [as well]").

[34] See Jean Frappier, "Structure et sens du Tristan: version commune, version courtoise," *Cahiers de Civilisation Médiévale* (*CCM*) 6 (1963), 255-60.

[35] Giuseppe Galasso, "Le forme del potere. Classi e gerarchie sociali," in *Storia d'Italia*, vol. 1 (Torino: Giulio Einaudi, 1972), 416.

centuries were, like Rustichello da Pisa, from Tuscany, Umbria, or Emilia-Romagna. As scholar Josef Macek points out, this gave life to a strong and influential group of intellectuals in the citizenry or *popolo* of nascent Italian city-states.[36] The formation of communal Italy in the central and northern sections of the peninsula established new city-states and consolidated the powers of the *popolo.* The new changes to the power balance of Italian communes also called for new forms of literature to support them, and this role was taken over by the "new men" recently added to the intellectual elite of Italian society.[37] Whereas French romancers wrote for nobles and kings, many of these new Italian writers wrote for advantaged portions of the *popolo* who were rich and aspired to upward mobility, but were certainly not "noble."

In fact, as John Larner points out, in Italy there was no clear definition of what "noble" meant because trade was not specifically a "middle class" activity, and the distinction between being noble and a merchant did not exist.[38] Whereas French writers and troubadours traveled from castle to castle, Italian writers were guests or functionaries of a city. Hence, these "new men," or rather, this new type of Italian intellectual, produced what their various patrons in a specific city preferred. Macek explains that the Italian storytellers and romancers had "a much wider audience than those afforded to them in the noble or royal courts."[39] Moreover, with the constant wars and invasions in Italy in the thirteenth century, new writers could also reflect their personal political situations or those of their patrons in their works. A reflection of Rustichello da Pisa's own personal and political crisis can be found in his Branor le Brun episodes.

---

[36] Josef Macek, "Gli intellettuali e la crisi comunale e nazionale," in *Storia della società italiana*, no. 7, ed. Franco Cardini et al. (Milano: N. Teti, 1982), 396.

[37] For power struggles in the new Italian elite see Victor I. Rutenburg, "La crisi dell'ordinamento comunale e i moti cittadini," in *Storia della società italiana*, no. 7, ed. Franco Cardini et al. (Milano: N. Teti, 1982), 361. See also Giuseppe Galasso, "Le forme del potere. Classi e gerarchie sociali," in *Storia d'Italia*, vol. 1 (Torino: Giulio Einaudi, 1972) 425 for the rise of "new men" in medieval Italian society.

[38] Larner, *Italy*, 90.

[39] Macek, "Gli intellettuali," 396.

In his introduction, Rustichello says he translated or compiled his Arthurian *Compilation* from a book (*dou livre*) in the collection of King Edward I of England.[40] Rustichello probably borrowed this manuscript while Edward I was traveling through Italy on his return trip from the 8th Crusade since the text already refers to Edward as the "King of England" or "*roi d'Engleterre*."[41] It is likely that Rustichello was a functionary who represented the city of Pisa in Sicily at the court of Charles of Anjou. Edward stayed at his Uncle Charles's court in Sicily on his voyage to and return trip from the Crusade. Although we call Edward an "English" king, his primary language was French, not English. Also, in this time period, romances were in French, so it seems logical that Rustichello would maintain the tradition of Arthurian prose romance and use the language of his patron by writing the *Compilation* in a French-like language (Franco-Italian). Furthermore, since Edward was a Plantagenet king, and "the poetry and ideology of the courts developed above all in the Plantagenet territories," it is also probable that Edward had an ingrained appreciation for Arthurian romance from his familial predecessors.[42] The potential influence Rustichello's writing had on Edward and the influence Edward had on Rustichello's Branor le Brun episodes has not been fully realized in the scholarship.

Literary scholar W.P. Ker once said that as a writer of fiction or romance, the author should be able "to pick up his ideas and his matter anywhere," and it seems that Rustichello "picked up" his ideas from both French romances supposedly borrowed from King Edward, and also, Celtic myth.[43] The "ideas" taken from French romance, were mainly the episodes compiled

---

[40] Cigni, *Il Romanzo,* 298.

[41] *Il Romanzo,* 1:2.

[42] Andrea Fassò, "La lotta col re-padre e il sogno della sovranità: gli eroi di Chrétien de Troyes," in *"L'immagine riflessa*," *Forme dell'identità cavalleresca,* 12, ed. Andrea Fassò et al. (Alessandria, 1991), 87.

[43] Ker, *Epic,* 350. For more information on Rustichello's original character of Branor resembling the Celtic god Brân the Blessed, see R.S. Loomis, *Celtic Myth and Arthurian Romance* (New York: Columbia University Press, 1927), 305-307. Furthermore, there is a discussion of the possible Celtic origins of Branor in fn. 77 of Appendix 1.

from the *Tristan en prose* and the *Guiron le Courtois*.[44] Although the name of "Branor le Brun" is found in the *Guiron*, he is nothing like Rustichello's original character of Branor in the *Compilation.* However, it is my summation that the Branor episodes were inspired not only by Celtic myth, and previous French romances in prose, but also by Rustichello's muse, the persona of Edward I of England,

The Branor le Brun episodes appear in eleven extant manuscripts of the *Compilation*, and these episodes were the most widely reproduced section from Rustichello's work. Branor is an invented character who is the only knight still alive from the "Old Table" of Uther Pendragon.[45] When Branor arrives in Camelot, he challenges all the Knights of the Round Table to joust and proceeds to beat them all. Rustichello never states whether the Old Table Knights are better than the "New" or Round Table Knights. However, since an Old Table and not New or Round Table Knight wins all the jousts, it appears that the Old Table is superior to the new one. Close analysis of the addition of the Branor le Brun episodes by Rustichello to Arthurian lore, or of the implications that these episodes had both within and outside of Italy, have also been neglected in the scholarship. Likewise, the legacy of the Branor character in other settings and time periods has not been sufficiently discussed. The Branor character spoke to many different audiences both locally and globally, and this fact cannot be ignored. With the Branor le Brun episodes, Rustichello forges his own chivalric table and attempts a political and allegorical commentary most likely pointed at the despotic rulers of Pisa: Ugolino della Gherardesca and Nino Visconti.

---

[44] The version of the *Compilation* found in BnF MS fr. 1463 does not have redactions from the *Guiron* but from the *Tristan en prose*. Nonetheless, other versions of Rustichello's *Compilation* opt to include large recensions from the *Guiron.* Recently Claudio Lagomarsini, in his book *Les Adventures des Bruns,* upholds that the massive *Guiron le Courtois* could also have been written by Rustichello da Pisa. See C. Lagomarsini, *Les Aventures des Bruns: Compilazione guironiana del secolo XIII attribuibile a Rustichello da Pisa* (Firenze: Sismel Edizioni del Galluzzo, 2014), xv-xvii and 191-208.

[45] As already mentioned, Rustichello "invents" a new story for the character of Branor, but this character or at least this name already appears in the previous work *Guiron le Courtois* (1235-1240).

Ugolino and Nino were Guelph leaders in a Ghibelline city. When Pisa lost the naval Battle of Meloria to Genoa in 1284, thousands of Pisans were taken prisoner or killed. Many of the Pisan prisoners were leaders of the Ghibelline party in Pisa. Ugolino was elected *podestà* or mayor of Pisa. He, and later his nephew Nino, were responsible for negotiating the release of these prisoners. However, if the imprisoned Ghibelline leaders returned to Pisa, they would certainly oppose the political powers of Ugolino and Nino. Therefore, little was done to secure the prisoners' release from Genoa. Hence, the Pisan prisoners were left to languish in Genoese prisons for over fourteen years. Ugolino and Nino were finally stripped of their powers in 1288. And unfortunate as it may have been for Rustichello to stay incarcerated for so long, I surmised that it did give him the opportunity to work on his Arthurian *Compilation* and also collaborate with Marco Polo on the *Milione.*

Marco Polo was probably captured by the Genoese after the Battle of Curzola (1298), but he could also have been captured by a Genoese raiding party as early as 1296. Neither Rustichello nor Marco Polo was freed until the general amnesty of prisoners after 1299. Since the earliest manuscript of the *Compilation* dates from 1290-1310, Rustichello must have written the Branor episodes previous to this date (before 1290). Furthermore, as I argue in this dissertation, since the Branor le Brun episodes were a political allegory or a piece of political propaganda pointed at the despotic rulers Ugolino della Gherardesca and Nino Visconti, these episodes had to have been written prior to their ousting from Pisa in the summer of 1288. The installation of a new *podestà* in Pisa, a certain Gualtieri Brunforte, literally translatable as "Strong "Brun," echoes the name of Branor le Brun, who was also very strong and had a form of the same last name, "Brun."

Despite their imprisonment, the Pisan prisoners in Genoa still held great political sway in their hometown, and some of the captured men were writers who composed a variety of works from their cells.[46] Most likely, Rustichello worked on the other episodes of his Arthurian *Compilation* both before and after 1288. That is to say, he probably worked on his redaction from the *Tristan en prose* as evidenced by the Viterbo fragment (1280-1300). The Viterbo fragment consists of a small portion from the *Tristan en prose* which is also found in the version of the *Compilation* in BnF MS fr. 1463. Furthermore, the Viterbo fragment seems to be from the same group of Pisa-Genoa manuscripts as MS fr. 1463, and the artwork in it is very similar to these manuscripts.[47] Furthermore, this fragment could date to slightly earlier than MS fr. 1463 (1290-1310), but due to its fragmentary nature and the poor state of the manuscript where it is found, nothing more can be discerned about the Viterbo fragment. Thus, the Branor episodes, Rustichello's original contribution to Arthurian prose romance, must have been completed a couple of years *after* the Battle of Meloria (1284) during the period of deposition of Ugolino and Nino (1288) and installation of Gualtieri Brunforte as *podestà* of Pisa (1288-1289). That is to say, when it became apparent to Rustichello and the other Pisan prisoners that Ugolino and Nino did not plan on negotiating peace terms with Genoa for their release, Rustichello continued writing and editing his Branor episodes to fit his own political situation. Rustichello found a mouthpiece for his political allegory in the form of his continuation of the Branor le Brun episodes. Furthermore, I suggest that Edward's documented presence in Italy and his known physical and martial attributes inspired Rustichello to write the original character of Branor le

[46] Maria Luisa Ceccarelli Lemut, "I Pisani prigionieri a Genova dopo la battaglia della Meloria: La tradizione cronistica e le fonti documentarie," in *1284 L'anno della Meloria,* ed. Renzo Mazzanti et al. (Pisa: ETS editrice, 1984), 78; Fabrizio Cigni, "Copisti Prigionieri (Genoa fine sec, XIII)," in *Studi di filologia romanza offerti a Valeria Bertolucci Pizzorusso*, t. 1, ed. Pietro G. Beltrami et al. (Pisa, Pacini, 2006), 425-439; and M. L. Meneghetti, *Scrivere in carcere nel Medioevo,* in *Studi di filologia e letteratura italiana in onore di Maria Picchia Simonelli,* ed. P. Frassica (Alessandria: Edizioni dell'Orso, 1992), 185-99.

[47] This manuscript fragment is found in the State Archives of Viterbo, box 13, n. 131.

Brun. The physicality similarities of Edward and Branor suggest that Rustichello was in the presence of the king or at least saw him when the English King was in Italy.

Rustichello most likely had a section of the Branor episodes completed before Edward's departure from Italy in 1273. More precisely, Rustichello had finished the episodes where Branor jousts and defeats all the knights at Camelot. A middle-aged King Edward probably found the ludic nature of an old and hoary knight, defeating younger Knights of the Round Table, quite entertaining, even though he would later revere the Round Table and, for political gain, use King Arthur as a figurehead. Rustichello then continued with his redaction of the *Tristan en prose* and his clerical work for the city of Pisa for the next ten years until his capture at the Battle of Meloria in 1284. After several years in prison, with no release in sight for himself or his fellow prisoners, Rustichello may have felt it necessary to finish his Branor le Brun episodes to call attention to his predicament. Hence, although the Branor episodes seem to have been originally inspired by Edward, Rustichello modified and added to them as a form of political protest to draw attention to his, his fellow prisoners', and Pisa's plight.

***

Rustichello da Pisa wrote for an audience who loved romances and knew French.[48] His audience could have been Italian merchants who traded in the Mediterranean Sea and spoke the *lingua franca*, a Plantagenet King, the Lords at the court of Charles Anjou, his fellow Ghibelline Pisan prisoners, or the supportive Pisan-Ghibelline *Popolo* who anxiously awaited the return of its menfolk. Needless to say, Rustichello probably had multiple audiences with different political agendas who all enjoyed reading or having Arthurian romances read to them. Although some

[48] In the thirteenth century, many upper-class northern and central Italians and especially merchants knew their own Italian dialect, French, and the trading language known as the *lingua franca*. The lingua franca was used mainly in the eastern Mediterranean and consisted mainly of Italian with some French, Greek, Arabic, and Spanish. See *"lingua franca – definition of lingua franca in English from the Oxford dictionary." Oxforddictionaries.com. Retrieved 18 June 2015.*

think that Rustichello's work lacks coherence, evidence suggests that this did not affect the popularity of the *Compilation*, and especially the Branor episodes. The admiration of Rustichello as an author is demonstrated by later manuscripts directly or indirectly influenced by the *Compilation* in French, Italian, Spanish, Serbo-Croatian, and even Greek.[49] In fact, we find traces, especially of Rustichello's Branor le Brun, in many different countries, cultures, and languages, and the popularity of his work is evidenced by the many copied versions of the *Compilation* being reproduced hundreds of years after Rustichello's death. Rustichello's work was continuously read, reworked, and adapted to fit new cultural and political contexts despite the original political allegory that, I contend, reflected the Pisan-Genoese conflicts after the Battle of Meloria. Thus, although Rustichello compiled much of his *Compilation* from other romance works, he was still an original and innovative author and should be remembered as such.

In Chapter One, I give a brief history of the manuscript and text of the *Compilation*, concentrating on the original episodes of Branor le Brun. I will also explore the complex manuscript tradition and criticism of the *Compilation* in this chapter. Here I highlight some of the more salient problems that surround the text: such as problems of attribution of the text and manuscript, difficulties with language, and questions of authorship. Likewise, I give my reasons for choosing a specific text that is closest to Rustichello's original language, intent, and his town of origin. In this chapter, I also search for Rustichello's narrative voice. I look for Rustichello's "voice" in his original contributions to Arthurian romance --specifically in the Branor episodes-- and less so in the compiled sections of his work. In the end, it seems that Rustichello does not have a single narrative voice but several. Rustichello's varying role is is evidenced in the Branor

[49] See Donald L. Hoffman's entry in N. Lacy's *New Arthurian*, "Rusticiano da Pisa," 392.

episodes where he is not only a romance writer, but also a historian and teacher. The ability of Rustichello to use elements from other authors and genres indicates that he was writing for a diverse audience who would appreciate the varied stylistics of his work.

The episodes of the "Old Knight" Branor le Brun are, until proven otherwise, original creations of Rustichello da Pisa and are not found in any manuscripts previous to BnF MS.fr. 1463. Furthermore, the theory that Rustichello wrote the Branor episodes is generally accepted in the scholarship, even though Rustichello is sometimes derided for his improper use of French.[50] Hence, I use MS fr. 1463 as my primary text because it is the most complete and also the oldest manuscript in existence (1290-1310). In the French redactions of the text, the content of Rustichello's Branor episodes was not greatly modified, although the order in which we find the episodes is sometimes changed. It was not until the *Cantare di Lansancis* (1430) in Italian (over one hundred and forty years after the *Compilation* was finished) that an author dared to change the famed character of Branor le Brun. In the *Compilation*, Branor is never beaten in a joust. However, in the *Cantare*, Tristan defeats the Old Knight through trickery. Yet in another Italian redaction of the *Compilation* in Italian, the *Tavola Ritonda* (1446), once again the Branor episodes remain in or return to their pristine state and are not rehandled. Hence, although Branor le Brun was often remodeled to fit other political contexts and time periods, the actual content of these episodes (with the exception of the *Cantare*) was rarely changed. Thus it seems that past authors of romance held Rustichello da Pisa in great esteem and almost never modified the essential aspects of his Branor episodes.

And why would they? An old man who can be beaten by a younger man is neither a remarkable nor even a memorable story. But by pinpointing the oldest surviving manuscript, we

[50] "per l'episodio di Branor, in mancanza di una fonte individuale, é lecito infatti pensare ad un'originale creazione di Rustichello." This quotation is from Claudio Lagomarsini's "La tradizione della Suite Guiron tra Francia e Italia analisi dei duelli singolari," *Medioevo Romanzo* 36.1 (2009), 123, fn. 53.

are closest to the author's origins, and his original intent before successive modifications. After discovering the oldest text, it will be possible to retrace the socio-political events that were changing Rustichello's world. And with this new reading, I propose that the Branor le Brun episodes reflect Rustichello's current political situation in Genoa and the crisis in his native city of Pisa. Moreover, I ask modern readers to set aside traditional literary canons and accept these works not written in the "mother language" of their authors as standard and not divergent tendencies in the late thirteenth century. In this chapter, I also gloss some of the images found in MS fr. 1463, so readers may better gauge the quality of the manuscript and decide for themselves if this was intended as a "courtly" or "common folk" manuscript. At the end of this chapter, I give an appendix of all the manuscripts which contain Rustichello's original episodes of Branor for those who wish to do further research on this portion of the *Compilation*. Lastly, in this chapter there is an appendix that summarizes the contents of the Branor episodes for quick reference.

In Chapter Two, I discuss Rustichello's relationship with Edward I of England, and the mutual influence they had on one another. In Rustichello's prologue to the *Compilation*, he states that he is translating or compiling a manuscript from a book in Edward's collection. This claim is not merely a traditional source-book topos, but chronologically "works" with the known movements of the king in Italy. But if Rustichello did actually "borrow" Edward's book of romance to compile his Arthurian Compilation, it actually must have been several books or at least one very large one. Despite the fact that Rustichello's *Compilation* is the only known Arthurian work directly connected to Edward, some detractors think that any love Edward had for Arthurian lore is negligible, a theory that I hope to disprove. Not until after his encounter with Rustichello da Pisa, did Edward began using Arthurian lore to justify his own legitimacy

and kingship in England.[51] It seems after the disastrous rule of his father Henry III, Edward was searching for inspiration and a strong role model to follow. He found this inspirational figure in the legendary "forefather" of England, King Arthur. Furthermore, the unique nature of Edward, with his local and global perspective, makes it probable that Edward would search for an external stimulus to mold and bolster his own local political agenda. Hence, in this chapter, I bring out the historical events in Edward's lifetime that demonstrate how he was the initial inspiration for Rustichello's Branor episodes, and also how Arthurian lore became a part of his leadership after his time spent in Italy.

Rustichello probably met Edward at the Sicilian court of Edward's uncle, Charles Anjou, when the English King was returning from, or journeying to the Crusade. The most striking similarities between Rustichello's Branor and Edward are their massive size and prowess in arms. Edward was a large man for his time, and according to the Midi poets, he was allegedly "the best lance in the world.[52] Edward, like Branor, represented an ideal form of knighthood that was in decline, and Rustichello, attuned to this shift in chivalry, made his character of Branor greatly resemble Edward. I hypothesize that Rustichello wrote the initial Episodes (1-16) of the total 39 of the Branor le Brun episodes found in the *Compilation* for King Edward, and later finished the remaining episodes (17-39) to fit his own political agenda. The invented knight, Branor le Brun or the "Old Knight" as he is known throughout the text, has so many similarities to Edward, it is likely that Rustichello had Edward in mind when initially writing these episodes.

Edward even metamorphosed into the character of the "Old Knight" or a *viel chanu* in two lamentations on his death written after 1307 in both Anglo-Norman and Middle English,

---

[51] See Roger Sherman Loomis' classic article, "Edward I, Arthurian Enthusiast," *Speculum* 28.1 (1953): 114-27.

[52] This is from stanza VI of the sirventés *Totz lo mons es vestitiz et abrazatzde falsetat* see C. Fabre, "Un sirventés de Cardinal, encore inédit en partie (1271-1272)," in *A Miscellany of Studies in Romance Languages and Literatures Presented to Leon E. Kastner* (Cambridge: W. Heffer & Sons Ltd., 1932), 217-47.

respectively.[53] These poems describe Edward in terms akin to how Rustichello describes his Branor le Brun character in the *Compilation*. Although there are no extant manuscripts of Rustichello's *Compilation* in England, it is entirely possible that the Branor episodes were known at the English court through copies sent to Edward or his wife, Eleanor of Castile, from Edward's Savoyard cousins. It is also quite possible that his Uncle, King Charles of Anjou, or Eleanor's brother, Alphonso X, sent copies of the Branor episodes from the *Compilation* to Edward. Likewise, Edward's funerary poems could have been written by someone who was present at Edward's court when he was traveling in Italy, France, or perhaps the Middle East. Hence, it is entirely possible that the author of these poems read or heard Rustichello's original episodes of Branor in some format, even though we no longer have manuscripts in England to prove that Rustichello's *Compilation* made it there. The mutual echoing of Edward and the character Branor are not unfounded, but currently are impossible to prove with the extant manuscript tradition in England. Nonetheless, the connections are there, and the poems seem to acknowledge this. As an appendix to this chapter, I give my English translations of these funerary poems in Middle English and Anglo-Norman.

In Chapter Three, I discuss the local political implications of the Branor episodes and the possible origins of the character of Branor le Brun. Rustichello lived through one of the most turbulent political upheavals of the city of Pisa, largely due to the constant infighting of the della Gherardesca and the Visconti families. He also was a survivor of the most disastrous naval battle in the history of Pisa (Meloria). Ugolino della Gherardesca's and later Nino Visconti's thirst for

[53] For other version of Edward's elegies see: Isabel Stewart Tod Aspin's *Anglo-Norman Political Songs* (Oxford: Published for the Anglo-Norman Text Society by B. Blackwell, 1953), 79-104 or also Peter Coss (ed.) and Thomas Wright (trans.), *The Political Songs of England from the Reign of John to That of Edward II* (Cambridge: Cambridge University Press, 1996), 241-250. My translations of these poems can be found in Appendix 4 and Appendix 5 of this dissertation. Lines referenced have been underlined.

.

political power in Pisa and Sardinia came close to causing the ruin of the entire city. Moreover, the machinations of these men almost destroyed the life of Rustichello, as he sat in prison, and wrote political allegory, romance epics, and a trade manual for a fellow Venetian prisoner. However, Rustichello and Pisa were eventually saved by an old, yet strong man named Gualtieri Brunforte. This Brunforte finally managed to put an end to the political vacuum caused by Ugolino and Nino, and he restored the former government of Pisa. However, despite the Ghibelline victory of finally having Ugolino and Nino dispossessed, the Pisan prisoners would not be released for another ten years.

In this chapter, I also consider the only known Arthurian Greek poem inspired by Rustichello's Branor le Brun episodes. This poem was used in a political context to bolster traditional values against the new Western aristocracy in Greece. Although serving a different political agenda than what was in Italy, the use of Branor's episodes in Greece demonstrates that the emulation of traditional values could easily be lifted and transformed to fit different political contexts. This poem is of particular interest because it places Rustichello's work squarely in the Mediterranean, where King Edward went on Crusade, and where Marco Polo spent a great deal of time. Also in this chapter, I discuss the legacy of Rustichello in Italian romance literature and how his *Compilation* influenced later works of romance in the peninsula. In fact, even Italy's greatest romancers Matteo Maria Boiardo and Ludovico Ariosto were somewhat inspired by Rustichello's work written two hundred years previous to their own works. Lastly, as an appendix to this chapter, I give my own translation of the Branor le Brun episodes in English, which to my knowledge, has never been available previous to this dissertation.

In Chapter Four, I discuss the fresco cycle at St. Floret in the Auvergne region of France (1350-1380). This fresco cycle was directly inspired by Rustichello's *Compilation*; probably

from a manuscript quite similar to BnF MS fr. 1463. By following the order of the episodes in this manuscript, one can fill in the lacunae in the fresco cycle (both pictorially and in the rubrics). I can prove that the Lord of St. Floret had a version of the manuscript very similar to BnF MS fr. 1463. In fact, I contend that the schematic plan of the fresco cycle follows exactly how we find the episodes in this manuscript. Furthermore the rubrics at St. Floret are interesting because instead of merely giving the names of the painted romance characters, there are also short summaries of what is depicted pictorially in the *langue d'oïl*. The choice of the *langue d'oïl* is strange for the Auvergne region because here the people spoke Occitan and not the *langue d'oïl*.[54]

St. Floret is far removed from the big cities of Paris and Avignon, but it was still affected by the cataclysmic events of its time. Namely, the encroaching mercenary soldiers of the Black Prince, Edward, and the Black Death. Although the political context in rural France was vastly different from communal Italy, the representation of a huge, strong, invincible, but old knight must have greatly appealed to the Lord of St. Floret because he chose to have these episodes from the *Compilation* depicted on the walls of his château. The Lord of St. Floret, Athon de St. Floret, had the entirety of the Branor episodes painted on the most visible register of the fresco cycle because Branor was the best knight of the Old Table. Furthermore, I believe that by extension Athon "saw" himself in the character of Branor le Brun, and in doing so, he could assure his people that the best, bravest, strongest, and most noble knight protected them from external dangers. In this chapter, I include an appendix of the rubrics found at St. Floret, photos from my research done on site in the summer of 2015, and also a schematic plan detailing how the fresco cycle mirrors the order of the episodes from the *Compilation*. The schematic plan is

[54] Nonetheless, surviving French redactions of the *Compilation* were in the *Langue d'oïl* and not Occitan or Provençal.

meant as an aid for the reader since the fresco cycle has many lacunae in its rubrics and painted images. All of these lacunae are indicated in the plan.

***

The location of the fresco cycle at Saint Floret demonstrates that Rustichello's work was widely disseminated outside of Italy. Furthermore, the many remaining manuscripts, peculiar circumstances, and variety of cultures in which we find traces of Rustichello's work should be viewed as evidence of his popularity both within and outside of Italy. The geographic diffusion alone of his work arguably earns Rustichello a place in the Italian literary canon. Hence, this dissertation aims to shed light on the original episodes of a much-neglected Arthurian romance (the *Compilation*) and its romancer and political activist (Rustichello da Pisa). The innovation and originality in the *Compilation* warrant attention because Rustichello greatly influenced how Italian authors wrote on the "Matter of Britain" in Italy. Lastly, I hope to demonstrate how Rustichello's original character, the "Old Knight" Branor le Brun, transcended both place and time insofar as his exploits were transcribed into many different languages, cultures, mediums, and political contexts.

At the start of this introduction, I mentioned the isolationist position of Rustichello's hometown of Pisa due to its economic and political stance in thirteenth-century Italy. Pisa was isolated locally in Italy due to its Ghibelline adherence and its position as a mercantile powerhouse, but it was also disliked globally due to its independent nature and its defiance of the Pope. This solitude also extends to Pisa's only romance author, Rustichello da Pisa. Rustichello was imprisoned for over fourteen years and would be virtually forgotten if not for his association with Marco Polo. There is also a certain solitude reflected in Rustichello's invented character of Branor le Brun. Branor is the last knight remaining of the Old Table of past heroes. He is

invincible, but no longer remembered by the newer generation of Round Table Knights. Branor represents an older system of chivalric values and strength that no longer existed among his contemporary knights and arguably a traditional set of values that also was virtually extinct in Pisa. Likewise, the inspiration for the character of Branor, Edward I, was a singular man whose famed strength and valor on the battlefield were non-paralleled in his time. Edward's political choices, such as the use of Arthurian lore to ensure a legacy, did manage to secure a lasting place for himself in the minds and hearts of his people and his poets. Despite the singular nature of place (Pisa), men (Rustichello and Edward), and fictional character (Branor le Brun) discussed in this dissertation, all of these entities were united in their solitude: a timeless solitude and isolation that apparently spoke to many.

Chapter 1 -- Argument for BnF MS fr. 1463

The purpose of this chapter is to present the author of the *Compilation*, Rustichello da Pisa, and to introduce the primary text used for this dissertation. Rustichello's *Compilation* is the first known Arthurian prose romance written by an Italian in the literary language called Franco-Italian, and it has many titles. There are almost thirty extant manuscripts and fragments that are somehow connected to Rustichello da Pisa's *Compilation:* they either transmit some of the same episodes compiled by Rustichello, contain Rustichello's original episodes (usually of Branor le Brun), or are written in a Tuscanized Franco-Italian similar to the language used by Rustichello.[1] Although Rustichello's *Compilation* had no official title, it is referred to in the literature variously as the *Meliadus, Guiron le Courtois,* or *Palamède,* due to the texts included with Rustichello's *Compilation*.[2] The uncertainty regarding the title is due to the sixteenth-century published editions of Rustichello's work, and also to the lack of a standard title and attribution to Rustichello in the criticism of his work.[3] The texts and textual fragments attributed

[1] These 30 manuscripts are in French, Italian, and Franco-Italian in a "cortese" prose that can be traced to one Italian scriptorium in the Pisa-Genoa axis. See Fabrizio Cigni, "Manuscrits en français, italien, et latin entre la Toscane et la Ligurie à la fin du XIIIe siècle: Implications codicologiques, linguistiques, et évolution des genres narratifs," in *Medieval Multilingualism: The Francophone World and its Neighbours,* ed. Christopher Kleinhenz et al. (Turnhout, Belgium: Brepols, 2010), 187-217. In Cigni's stemma of the manuscripts he places BNF MS fr. 1463 and the small fragment from Viterbo (one badly preserved folio from the Tristan portion of the manuscript) in the "a" branch and relegates all other copies of the *Compilation* to a very large "b" branch. Lastly, he has a "c'" branch that contains f.fr. 99 and Chantilly 645-6-7 from the fifteenth century. He starts his stemma with the Oxford Bodleian Douce 189, which is a part of the *Tristan* written copied in the late thirteenth century in a northern Italian scriptorium. Douce 189 (78 fols.) was perhaps similar to Edward's book borrowed by Rustichello (See Cigni, *Il Romanzo,* 369-70).

[2] We know for certain that the *Palamède* and the *Guiron le Courtois* were written in Italy at least before 1240; see Venceslas Bubiniceck, ed. *Guiron le Courtois: roman arthurien en prose du XIIIe siècle* (Berlin: De Gruyter, 2015), 5-8. Roger Lathuillère also confronts the problem with the title of the *Compilation*, although his study is much in line with Löseth's classic study. Furthermore, Lathuillère wanted to link everything in the *Compilation* back to the *Guiron le Courtois;* see R. Lathuillère, "La compilation de Rusticien de Pise," in Jauss and Köhler (eds.), *Grundriss der romanischen Literaturen,* IV/1: *Le roman jusqu'à la fin du XIIe siècle* (Winter 1978), 623-25.Confusion of titles for Rustichello's work is also apparent in Edmund Garratt Gardner's *The Arthurian Legend,* 44-64. Here Gardner calls Rustichello's work "Compilation," "Meliadus," and also "Girone."

[3]Compilation(s) usually attributed to Rustichello da Pisa are massive, and in sixteenth-century France the work was divided into two sections; one called the *Guiron le Courtois* published in 1501 by Vérard, and the other called the

to Rustichello feature at least one or a combination of the following: *Guiron le Courtois*, *Meliadus*, *Tristan* and *Lancelot en prose*, *Palamède*, and the Post-Vulgate *Mort Artu*.[4]

Scholars from various fields have been successful in discovering new texts and textual fragments now attributed to Rustichello da Pisa. These scholars usually try to pinpoint which works inspired the *Compilation*, to discover the interpolations in these works, and then to determine how Rustichello's Arthurian *Compilation* later influenced Italian redactions of similar chivalric material. These scholars have done valuable linguistic and codicological work on Rustichellian manuscripts, usually tracing elements of the *Compilation* back to one of the many complicated branches of the *Guiron le Courtois* and other known romance works such as the *Tristan en prose*.[5] Nonetheless, few have pondered why Rustichello bothered to add to the already copious romance compendium from France, or what his Branor le Brun addition means for the historical and political context of late thirteenth-century Pisa.[6] Furthermore, whatever Rustichello's real or imagined source material, the sheer quantity of extant manuscripts found

---

Meliadus, published in 1532 by both Galliot du Pré and Denis Janot. For romance works printed in sixteenth- and seventeenth-century France of Rustichello's text, and on printed versions of Rustichello's *Compilation*, see Jane H.M. Taylor, *Rewriting Arthurian Romance in Renaissance France: From Manuscript to Printed Book* (Cambridge: D.S. Brewer, 2014), 93-97.

[4] For more information on the *Guiron le Courtois*, in relation to Rustichello's *Compilation*, see fn. 15, 44-45, of the "Introduction" of this dissertation. For the branches of the *Guiron*, see fn. 88 of Appendix 3, and for the character of Guiron in romance see fn. 77 of Appendix 1 for the history of Guiron in relation to the Le Brun family. For the *Tristan* and *Lancelot en prose*, see the seminal study by Emmanuèle Baumgartner, *Le Tristan en prose: Essai d'interprétation d'un roman médiéval* (Geneva: Droz, 1975), XIII-351. Rustichello relies most heavily on the *Tristan en prose*. When Rustichello redacts the *Tristan*, he is considered by most critics to be a copyist or compiler and *not* an actual or even original author.

[5] Much work is currently being done on the connections between Rustichello's *Compilation* and the *Guiron le Courtois*. But as Alberto Limentani points out, this is a very slippery slope because no two texts in the *Guiron* cycle can be affirmed with certainty to have complete dependency on the other text. This is because the text was in continuous evolution and there were frequent innovations, perhaps by random coincidence and/or perhaps to maintain a certain affinity with previously written texts. See A. Limentani, *Dal roman de Palamedés ai cantari di Febus-el-Forte: testi francesi e italiani del due e trecento* (Bologna: Commissione per i testi di lingua, 1962), CIII.

[6] The only explanation (of sorts) as to why Rustichello wrote his *Compilation* comes from Fabrizio Cigni: "The resulting compendium is perfectly cast in the novelistic taste of municipal Italy of the last thirteenth century, and the theme of the ancient knights' superiority will certainly appear in the *Novellino* and the *Tavola Ritonda*." "French Redactions in Italy: Rustichello da Pisa," in *The Arthur of the Italians: The Arthurian Legend in Medieval Italian Literature and Culture*, ed. Gloria Allaire et al. (Cardiff: University of Wales, 2014), 25.

throughout Europe attests to the popularity of Rustichello's work and its importance to the corpus of Arthurian romance.[7]

PUBLICATION AND CRITICISM OF THE *COMPILATION*

Fabrizio Cigni's publication of BnF MS fr. 1463, *Il Romanzo Arturiano di Rustichello da Pisa*, is accepted as the best reproduction of a Rustichellian text in modern-day scholarship. Cigni was the first to complete a critical edition of Rustichello's *Compilation*, which was published in 1994.[8] His edition includes a facsimile of the entire manuscript with transcription, translations into modern French and Italian, various linguistic notes, and an extensive bibliography. Cigni argues that MS fr. 1463 is the oldest version of Rustichello's work on the basis of its language: MS fr. 1463 still has many Italianisms, and subsequent versions of the *Compilation* are in a "purer" French—as medieval French literary scholar Simon Gaunt put it, "a Franco-French text."[9] Nonetheless, the argument that MS fr.1463 is the oldest known manuscript

---

[7] Cigni puts the number at 27 exemplars in 16 different works that all have similar layout and iconography (Cigni, *Il Romanzo*, 18). For the purposes of my research, and after checking all manuscripts with the Branor episodes, I rely principally on Cigni's edition of MS fr. 1463, as this manuscript has been deemed the oldest and closest to Rustichello's original work. And although Fligelman-Levy states: "Rustichello da Pisa came to Arthurian prose romance at a time when the fundamental works had already been written" see John Fligelman-Levy's Ph.D. dissertation, "Livre de Meliadus: An Edition of the Arthurian Compilation of BnF MS fr. 340 Attributed to Rusticien de Pise" (University of California, Berkeley, 2000), iii. However, I find this argument a bit misleading since Rustichello's *Compilation* (especially his original episodes of Branor le Brun), were continuously copied into the seventeenth century. Furthermore, with the constant trade, wars, and intermarriage in the aristocracy, and later the papacy moving to Avignon, there was constant contact between North and Central Italy and France.

Of note, J. Fligelman Levy worked principally on BnF MS fr. 340, a work written some 130-140 years after MS fr. 1463. He refers to "Rustichello" when referring to MS fr.1463, but to "Rusticien" in f.fr. 340. "Rusticien" was a collective group that Fligelman Levy calls "Atelier 1," which includes a writer known as "Rusticien" (the compiler-scribe-redactor), an illuminator, and a rubricator (all different from those of MS fr. 1463), see Fligelman Levy, "Livre de Meliadus," xv.

[8] Cigni's edition is highly lauded by scholars, with the notable exception of Fligelman Levy, who "object[s] especially to Cigni's having included a lai in one part of his reconstructed text of Rustichello's *Compilation*. Rustichello, as Rusticien after him is not interested in the poetry or the love stories associated with Tristan or Meliadus except as a background to action" (Fligelman Levy, "Livre de Meliadus," xiv, fn. 8).

[9] See Simon Gaunt, *Marco Polo's Le Devisement du Monde: Narrative Voice, Language, and Diversity* (Suffolk : D.S. Brewer, 2013), 87.

attributable to Rustichello da Pisa was first made by renowned Italian scholar Luigi Foscolo Benedetto after he analyzed all the manuscripts in the Bibliothèque Nationale in Paris (BnF).[10]

Following the work of Foscolo Benedetto, Cigni also came to the conclusion that MS fr. 1463 is the only specimen of the *Compilation* chronologically close to the writing of the original work.[11] Rustichello probably started writing the *Compilation* in the early 1270s, and MS fr. 1463 was made between 1290-1310. Thus, a maximum of thirty years passed from the inception of the text and the manufacture of the oldest surviving copy of it. Hence, MS fr. 1463 gives a fairly accurate idea of the state of the language of the manuscript after 1274 and before heavy modifications were made to it in later editions.[12] Cigni does not elaborate on these "heavy modifications," but he most likely means the re-writing and de-Italianizing of the text that happens in subsequent versions such as in BnF MS fr. 340 and BnF MS fr. 355. Thus, MS fr. 1463 is probably closest to Rustichello's original *Compilation* in language, intent, and form. Nonetheless, to my knowledge, no one has specifically studied the Branor le Brun episodes (Episodes 1-39) or proposed a valid rationale as to why Rustichello would write them.

There are 236 total episodes in the *Compilation,* the initial 39 of which are the episodes of Branor le Brun. The 197 episodes following the Branor episodes are extrapolations and abbreviated episodes from the *Tristan* and *Lancelot en prose*. Of the 39 Branor episodes, the first 16 were decidedly inspired by Edward I: they showcase Branor's immense size and ability with a lance, which were also the qualities for which Edward was known outside of England. However, Episodes 17-39 have a decisively different tone than Episodes 1-16: in Episodes 17-39 Branor

[10] The Bibliothèque Nationale in Paris (BnF) is the largest holder of manuscripts attributed to Rustichello da Pisa. For a list of extant manuscripts of Rustichello's *Compilation,* see Appendix 2. In this Appendix, I provide a list of the manuscripts that includes some or partial portions of the Branor le Brun episodes (1-39). In Appendix 3 there is a summary of the contents of BnF MS fr. 1463.

[11] See fn. 35 of this chapter for a brief explanation of Foscolo Benedetto's findings at the BnF.

[12] Cigni, "Pour l'Edition," 522.

loses some of his bravado, and jousts only to help the defenseless. Noteworthy is the fact that the political situation of Rustichello and Pisa changed greatly after Edward left Italy, as does the tone of Rustichello's text. After Edward returned home to England, Rustichello's work took a political and allegorical turn that reflected his and Pisa's current state.

Because of the tumultuous times that Pisa faced in the late thirteenth century, the men who worked for the Pisan Comune in other cities and courts were kept extremely busy. These learned men were judges, notaries, clerks, and scribes. Also, they were part of a new intellectual class who wrote and recorded more than just legal and trade documents. Rustichello was one of these men, and since his primary job was not writing Arthurian romance, the writing of his *Compilation* probably came in starts and stops. Moreover, Rustichello probably found inspiration from a variety of sources and different romance texts. The combination of romance texts in manuscripts was customary in the late Middle Ages. As Cigni points out, the verb *conpiler* meant "to make extracts and compose something new," which is what Rustichello attempts to do in his *Compilation.*[13] Rustichello took previously written romance material and then added original episodes such as those of Branor le Brun to make his Arthurian work. Medievalist Mary Speer elaborates that "to observe that the writing of medieval romance, at the level of both composition and transmission, inevitably constitutes the rewriting of one or more pre-existing texts - is to state a truism as profound as it is obvious."[14] Rustichello does this in his *Compilation* by essentially summarizing the most important martial episodes of previous romance works and then occasionally adding original insertions into the preexisting story. Nonetheless, when

[13] Fabrizio Cigni, "French Redactions in Italy: Rustichello da Pisa," in *The Arthur of the Italians: The Arthurian Legend in Medieval Italian Literature and Culture*, ed. Gloria Allaire et al. (Cardiff: University of Wales Press, 2014), 25.

[14] Mary B. Speer, "The Long and the Short of Lancelot's Departure from Logres. Abbreviation as rewriting in *La Mort le Roi Artu*," in *Text and Intertext in Medieval Arthurian Literature*, ed. Norris J. Lacy (New York and London: Garland Publishing, Inc., 1996), 219.

Rustichello collaborates with Marco Polo on the *Devisement* he plays a decidedly different and perhaps more complicated role, In the *Devisement,* Rustichello is essentially giving a simultaneous adaptation of Marco's words into a romance-like mode.

The understatement and originality of the Branor episodes did not go unnoticed, and the Branor episodes of the *Compilation* were the ones most often reproduced and copied.[15] Cigni reintroduced the hypothesis of the originality of Rustichello's *Compilation* based on its overall content but especially on the original episodes of the invented character of Branor. However, he was not the first to note the originality of the work; in fact, many have noted the singularity of the Branor episodes, including the editor of Marco Polo's *Milione*, Luigi Foscolo Benedetto.[16]

Criticism of Rustichello as an author is sparse and usually unflattering. J. Fliegelman-Levy has astutely noted that modern judgments of Rustichello's work as subpar "comes entirely from Eilert Löseth's late nineteenth-century summary [of it]."[17] Löseth's refers to "the fragmentary compilation and the incoherence attributed to Rustichello da Pisa" (*la compilation fragmentaire et incoherence attribuées à Rusticien de Pise*).[18] In fact, Löseth went out of his way to prove Rustichello an unoriginal author who merely copied the *Tristan en prose* from a text attributed to the mysterious Hélie de Boron.[19] Any attribution to Hélie is dubious, however,

---

[15] Arthurian scholar Norris Lacy states that the popularity of the *Compilation* is attested by its direct and indirect influence on other works written in French, Italian, Spanish, Serbo-Croatian, and Greek; Lacy, *New Arthurian*, 392.

[16] To name a few, in his introduction to the *Milione* Luigi Foscolo Benedetto noted that many of the adventures relayed by Rustichello in his romance (without giving specific episodes), had never been told before. See Marco Polo, *Il Milione, prima edizione integrale*, ed. Luigi Foscolo Benedetto (Firenze: L.S. Olschki, 1928). Edmund Gardner states that "the source for the story is unknown"; see E. Gardner, *Arthurian Legend*, 50, fn. 1. Scholars after Cigni such as John Fligelman Levy and Claudio Lagomarsini reaffirm that until texts disprove Cigni's conclusion, we must assume that the episodes of Branor le Brun are an original creation of Rustichello. See Claudio Lagomarsini, "La tradizione della suite Guiron tra Francia e Italia: analisi dei duelli singolari." *Medioevo romanzo* 36.1 (2009), 123, fn. 53 and Fligelman Levy, "Livre de Meliadus," lxxviii- lxxix.

[17] Fligelman Levy, "Livre de Meliadus," lvi.

[18] Eilert Löseth, *Le roman en prose de Tristan, le Roman de Palamède, et la Compilation de Rusticien de Pise; analyze critique d'après les manuscrits de Paris* [originally published in 1890] (New York: B. Franklin, 1970. Rpt), 1-38.

[19] Lacy, *New Arthurian*, "Palamedes," 352.

given that we do not know for certain whether any such author named "Hélie" or "Élie de Boron" ever existed. Moreover, no one has been able to determine what Rustichello's relationship was to the writer of the first half of the *Tristan en prose*, the similarly mysterious Luce de Gat.[20] Furthermore, Löseth did not analyze MS fr. 1463, as Cigni and Foscolo Benedetto did; he looked at many other manuscripts from the BnF, but not those in the Franco-Italian language closer to Rustichello's original language. Also, when Löseth discussed the text on a linguistic level, it was only to comment negatively on the many "Italianisms" still present in Rustichello's language. Cigni disregards most of these comments because Löseth did not look closely at the oldest manuscript, MS fr. 1463. Furthermore, Colette-Anne Van Coolput writes that although one cannot deny that Löseth was meticulous in his recording of manuscripts and their variants, "the use of his *Analyse* is far from convenient."[21] Hence, although Löseth was "conscientious and meticulous" in noting the textual variants, his work is overly complicated and almost impossible to follow, and hence "far from convenient" for modern scholars. Nonetheless, no other comprehensive study of all the works attributed to Rustichello da Pisa exists after Löseth's erudite yet uneven study of the late nineteenth century; hence it is still used today.

Despite its limitations, Löseth's work greatly influenced both nineteenth- and twentieth-century scholarship on Rustichello's *Compilation*. Even today, as Fligelman Levy states, "most

---

[20] See E. Baumgartner's article "Luce de Gast et Hélie de Boron, le chevalier et l'écriture," in *Romania* 106 (1985): 326-340, and also see Renée L. Curtis's article, "The Problems of the Authorship of the *Prose Tristan*," *Romania* 79 (1958): 314-38. Also Renée L. Curtis's more recent "Who Wrote the *Prose Tristan*? A New Look at an Old Problem," *Neophilologus* 67 (January 1983): 35-41. Here Curtis elaborates on his previous 1958 article, "The Problems", and gives convincing evidence of the existence of two separate authors--Luce de Gat and Hélie de Boron--for different versions of the *Tristan en prose*. In this article, Curtis reiterates Baumgartner's theory on two distinct authors for the *Tristan en prose* and successfully challenges Löseth and post-Löseth scholars who would dispute the idea of two separate authors for the different versions of the *Tristan*.

[21] "On ne prendra pas vite en défaut l'érudit consciencieux et méticuleux quand il s'agit de consigner les variantes des manuscrits qu'il a examinés avec la plus grande attention. Mais l'utilisation de son *Analyse* est loin d'être commode ;" see Colette-Anne Van Coolput, "Aventures querant et le sens du monde. Aspects de la réception productive des premiers romans du Graal cycliques dans le 'Tristan en prose,'" *Medievalia Lovaniensia*, 1.14 (Leuven: Leuven University Press, 1986), 11.

critics have viewed Rustichello's work as a flawed effort of a man who mistook the most basic narrative technique of interlacement."[22] Critics today seem to forget that there are fundamental differences between Rustichello's text and those of his French predecessors. These differences are mainly due to the fact that Rustichello was an Italian who was writing chivalric prose in a land where there were no native Arthurian romances (that we know of), and that his political reality was very different from French or English romance writers working under an established monarchy. Perhaps Rustichello never acquired the finesse of a seasoned romancer, but he was evidently good or renowned enough to collaborate with Marco Polo on his *Devisement du monde*, and was able to borrow King Edward's books to help him write his Arthurian compilation.

In Rustichello's quest to write the most exciting adventures in the shortest time (presuming that he indeed borrowed books from King Edward or someone in his retinue), he had to absorb and condense the episodes that appealed most to his audience(s). For Rustichello, it seems that the key word in his writing was "economy," as he deleted all non-essential elements in his work which, in turn, quickened its pace. In fact, Rustichello even states in his introduction that he will "promptly treat all the great adventures in the world" (*et traitera tot sonmeemant de toutes les granz aventures dou monde*), which he proceeds to do.[23] Thus, Rustichello achieved both comprehensiveness and, at the same time, a very fast paced romance by his elimination of most dialogues, romantic interludes, and comedic episodes, and he also "stripped down his

[22] Fligelman Levy, "Livre de Meliadus," xi. As Peggy McCracken also reiterates, "Interlace is the technique of weaving in and out multiple storylines that is typical of prose romance"; "The Old French Vulgate Cycle," in *The Cambridge Companion to Medieval French Literature,* ed. Simon Gaunt et al. (New York: Cambridge University Press, 2008), 38.
[23] *Il Romanzo,* 1:3.

language to the simplest of forms.[24] Moreover, it seems that with Rustichello's abridgment of so many different romance texts that he was working on borrowed time. Perhaps he had to return his source materials to Edward I, or, as I hope to elucidate in the following chapters, Rustichello was working in highly stressful times from a prison cell or perhaps a scriptorium in Genoa, and no longer had his source material of "Edward's book"[25] before him, and therefore had to write from memory.

NARRATIVE VOICE AND ROLE-PLAYING IN THE *COMPILATION*

"Finding" Rustichello and his narrative voice is a difficult task because he was not a typical romance writer, and the texts attributed to him are vastly different in tone. As Simon Gaunt notes, "he never fits the paradigms of current authors."[26] Moreover, as Arthurian scholar Norris Lacy explains, "the complexity of the manuscript tradition and also of the text itself, sometimes joined to other texts, sometimes split off of them, sometimes interpolating episodes, sometimes suppressing [them]," makes Rustichello's text difficult to study.[27] We know very little about Rustichello except for the works attributed to him: the Arthurian *Compilation* and later, the *Devisement du Monde/Milione,* written with Marco Polo. Much work has been done on the question of narrative voice and the division of labor in the *Devisement* because of its collaborative nature. Generally speaking, the content of the *Devisement* is decidedly Marco Polo,

---

[24] For more on medieval stylistic elements in Arthurian literature, see Alexandre Micha, "Stéréotypes et tics stylistiques," Chapter 10 in his *Essais sur le cycle du Lancelot-Graal, publications romanes et françaises,* CLXXIX (Geneva: Droz, 1987), 227-250.

[25] As Fligelman Levy astutely points out in his unpublished dissertation: "it is probably best that we do not accept as literal truth that his selection came from a single book; . . . I don't know of any single work prior to Rusticien [Rustichello] which contains a mix of narratives even remotely like Rusticien's *Compilation* published before the 1470s" (Fligelman Levy, "Livre de Meliadus," 1 and fn. 29). Hence, if Rustichello was inspired to write his *Compilation* from a book in Edward's collection, it must have actually been *several* books, or at least a very large one.

[26] Gaunt, *Marco Polo*, 28.

[27] Norris Lacy, personal communication, 12/03/2011.

and the style of the work is Rustichello's.[28] But since the *Compilation* was presumably written by Rustichello alone, thirty years previous to the *Devisement*, there should be no confusion as to who is writing or speaking in this work.

However, Rustichello's *Compilation* (like the *Devisement*) has the added problem that no two versions of the text are alike. In the *Compilation*, theoretically speaking, Rustichello da Pisa should always be the sole narrator, compiler, and translator of his work, but the various manuscripts of the *Compilation* often have different works compiled in them. Thus, one must first find the oldest available version of the *Compilation* in order to be the closest to Rustichello's original content and intent. For the purposes of this dissertation and my sociopolitical reading of the Branor le Brun episodes, I will search for Rustichello's narrative voice mainly in these invented episodes and less in the compiled section of the *Compilation*, which will be addressed only peripherally.[29] Yet even when Rustichello's *Compilation* is pared down to the Branor episodes, it is still difficult to discern Rustichello's narrative voice because he assumes not only the role of romancer, but also the roles of historian and teacher.

***

BnF (Bibliothèque Nationale of Paris) MS fr. 1463 (1270-1295) is generally accepted in the scholarship as the oldest Rustichellian manuscript containing the *Compilation*. The initial image in MS fr. 1463 is a crowned male figure seated on a throne. He is wearing a red mantle and green robes and is holding a long scepter in his right hand, and with his left hand he points to

---

[28] "Perpetual and challenging, sometimes troubling, leakage between different positions in, and relations to, the text: between Marco and Rustichello, between author(s) and narrator(s), between narrator(s) and readers, between protagonists and readers;" Gaunt, *Marco Polo*, 58. For more on who is writing and who is speaking in the *Devisement*, see also Larner, *Marco Polo*, 105, and Valeria Bertolucci Pizzorusso, "Enunciazione e produzione del testo nel *Milione," Studi Mediolatini e Volgari,* 25 (1977), 5-43.

[29] For example, research could be done on the suicidal Guinevere (Episode 11-12) or also on another original character of Rustichello's named Dalides, found only in the *Compilation* (Episodes 61-63). Furthermore, work could be done on the character of Mores, a vassal of Tristan. This character is in the *Tristan en prose*, but has a much more substantial role in the *Compilation* (Episodes 89-101). All of the above seem to be original contributions made by Rustichello to Arthurian romance, but will not be addressed in this dissertation.

the beginning of the text. The image itself is badly faded and also somewhat confusing. The text reads: "And master Rustichello da Pisa, who is imaged/represented above" (*Et maistre Rusticiaus de Pise, li quelz est imagines desovre*), which identifies this image as Rustichello [see Figure 1.][30] But why is a "maistre" or "master," which title qualifies him as a learned man, wearing the crown of kings? This image could represent King Arthur, who is mentioned in the prologue as ". . . King Arthur, Lord of Logres and of Britain" (. . . *roi Artus le sire de Logres et de Bretaingne*).[31] However, it is more likely that this figure represents King Edward of England, who is also mentioned in the prologue as "my Lord Edward, the King of England" (*monseingneur Odoard, li roi d'Engleterre*).[32] The image, or rather the pointing gesture that this male figure makes to indicate the start of the text, is the typical image of a "*maistre*" in medieval iconography.[33] And although this image is found only in MS fr. 1463, the phrase "*li quelz est imagines desovre*" appears in later manuscripts and printed versions of the *Compilation*, even though no actual image is depicted. The presence of the image with the text indicating this image in MS fr. 1463 attests to the fact that it was the first --or at least one of the first-- version of the *Compilation*. The reoccurrence of this line even when no image appears in other texts is probably because this it is the first mention of Rustichello's name in the *Compilation*.

[30] *Il Romanzo,* 1:3.
[31] Ibid., 1:6.
[32] Ibid., 1:2.
[33] Cigni, "French Redactions," 25.

Fig. 1, f. 1v, BnF MS fr. 1463. Crowned figure who indicates the start of the text: Edward? Rustichello da Pisa?

In the texts attributed to Rustichello he is always referred to as a *maistre*, and in MS fr. 1463, he is specifically referred to three times as "maistre Rusticiaus de Pise".[34] [see Figure 2.]

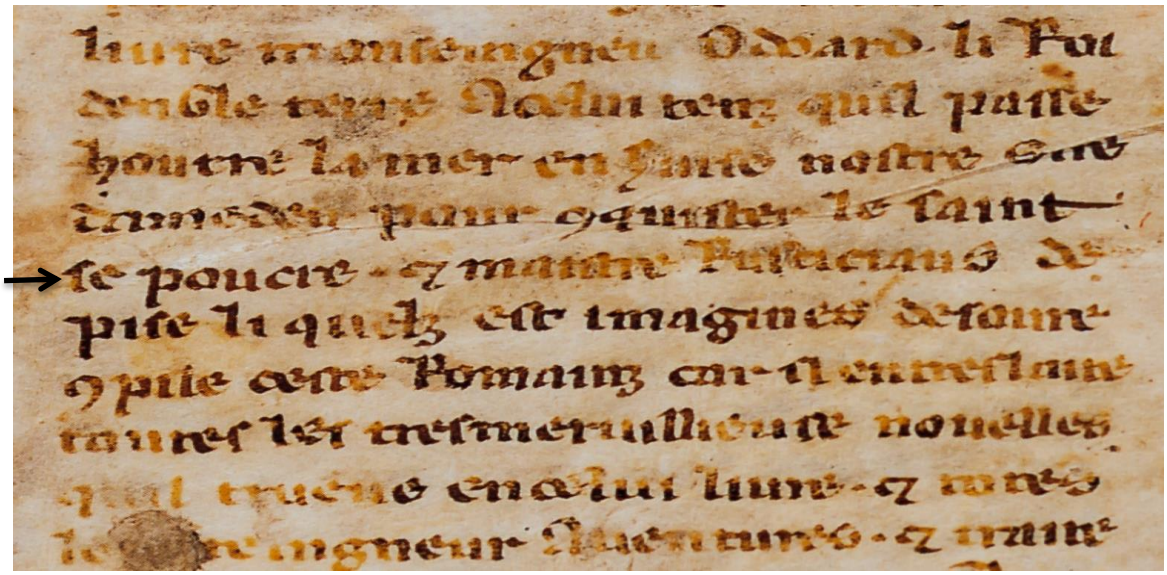

Fig. 2, f. 1v, BnF MS fr. 1463. 1st indication of Rustichello"s name "maistre Rusticiaus de Pise" in this text.

[34] The "maistre Rusticiaus" references in the BnF MS fr. 1463 are found in the following episodes: *Il Romanzo,* 1:3, 16:19, and 39:11.

Furthermore, Rustichello's name is found only in the Branor le Brun episodes (Episodes 1-39), and in the other episodes of the text he is referred to simply as a "maistre" without a name. By naming himself in the Branor episodes, it seems, Rustichello wants to put a stamp on his original contribution to Arthurian lore. Yet in the compiled sections of his work, it seems that Rustichello can remain anonymous as long as a "master" or learned man is relaying these tales.

Rustichello's name displays a variety of spellings in all the texts attributed to him: *maistre Rusticiaus de Pise* (BnF MS fr. 1463), *Reuticiens de Pise* (BnF MS fr. 340 and BnF MS fr. 355), *messier Rustaciaus* (BnF MS fr. 1116 *Devisement dou Monde* [Franco-Italian version]), and *Rustico da Pisa* (*Tristano Veneto*). After a thorough study of all the texts attributed to Rustichello from the BnF, Luigi Foscolo Benedetto came to the conclusion that *Rusticiaus de Pise, Reuticiens de Pise, messier Rustaciaus,* and *Rustico da Pisa* were all the same man: Rustichello da Pisa.[35] Furthermore, Benedetto's study also proved that both the *Devisement* and the *Compilation* were written by the same author. Nonetheless, who Rustichello was and what was his exact profession remain a mystery. Fabrizio Cigni states that "we can detect a *scriptor* of notarial training, which could also account for the qualifier of *maistre* in his works."[36] These "*scriptors"* or "*maistres"* in medieval Italy were responsible for administrative, clerical, judicial, and notarial work in the Italian communes. Hence, it can be assumed that Rustichello was from, or at least worked for, the city of Pisa, since his toponymic is "da Pisa" or "from Pisa." If

[35] The BnF holds most of the manuscript attributed to Rustichello da Pisa; for a full list of these, see Appendix II of this dissertation. Also see Luigi Foscolo Benedetto's brief article "Non Rusticiano ma Rustichello," in *Uomini e tempi: pagine varie di critica e storia* (Milan: Ricciardi, 1953), 63-70. In this article, Foscolo Benedetto gives a summary of his findings after looking at all the manuscripts in the Bibliothèque Nationale in Paris (BnF) for versions of both the *Compilation* and editions of the *Devisement* in Franco-Italian. Besides identifying Rustichello da Pisa's name, Foscolo Benedetto also wanted to verify the state of language of the earliest versions of both texts to determine if Rustichello both wrote the text of the *Compilat*ion and contributed to the text of *Devisement.* Benedetto's linguistic analysis is generally accepted by scholars, and his linguistic analysis of the text proved that the same man, Rustichello da Pisa, wrote both the *Devisement* and the *Compilation*. Despite Benedetto's study, we have no independent archival documents that verify the identity of Rustichello da Pisa.

[36] Cigni, "French Redactions," 25.

Rustichello worked for the Pisan commune, this could explain why he was at other Italian courts and how he met (or at least saw) King Edward I of England. Rustichello's work in the courts could also explain how he had an opportunity to peruse Edward's books, as will be discussed shortly.

To my knowledge, Giorgio Del Guerra is the first scholar who seriously searched the Pisan archives for the true identity of Rustichello da Pisa. Nonetheless, Del Guerra was unable to make a definitive identification because many notaries and jurists from Pisa had the surname "Rustichelli" or were called the diminutive "Chello."[37] Similarly, historian Emilio Cristiani mentions several "Rustichelli" or "Chelli/o" who were merchants, judges, or notaries in Pisa from 1263 to 1319 (i.e., the period in which both the *Compilation* and the *Devisement* were written).[38] Neither Del Guerra nor Cristiani were able to definitively identify any of the "Rustichelli" or "Chelli" found in the Pisan archives as Rustichello da Pisa. On the other hand, André Joris hypothesized that Rustichello was a certain "Rustike" who worked in Henry VII's court in northern Italy.[39] Although scholars have tried to identify Rustichello as one of the many Pisan or at least Tuscan notaries with a name similar to "Rustichello," it has been impossible to identify him positively through archival documents.[40] Hence, we "find" the mysterious author

---

[37] See Giorgio Del Guerra, *Rustichello da Pisa* (Pisa: Nistri-Lischi, 1955), 1-67. Del Guerra combed the Pisan archives for source material and more information on "Rustichello." Since there were so many Rustichellos in Pisa in the late thirteenth and early fourteenth centuries, he conceded the impossibility of finding specific references to Rustichello da Pisa in the archives.

[38] For other "Rustichelli" or "Chelli" in the Pisan archives, see Emilio Cristiani, *Nobiltà e popolo nel comune di Pisa dalle origini del podestariato alla signoria dei Donoratico* (Napoli: Istituto italiano per gli studi storici, 1962), 470-71.

[39] For another possible candidate for "Rustichello," author of the *Compilation* and the *Devisement*, see André Joris, "Autor du *Devisement du Monde*. Rusticien de Pise et l'Empereur Henri VII de Luxembourg (1310-1313)," in *Le Moyen Âge,* 100 (1994), 353-368.

[40] For other conjectures on the identity of Rustichello, see also Adriano Augusto Michieli, "Chi fu e che cosa fece Rusticiano da Pisa," *Atti della Reale Accademia del R. Istituto Veneto di Scienze, Lettere ed Arti,* 84 (1924-1925), 321-37, and Cesare Segre, "Chi ha scritto il *Milione* di Marco Polo?," in *I viaggi del "Milione:" itinerari testuali, vettori di trasmissione e metamorfosi del Devisement du monde di Marco Polo e Rustichello da Pisa nella pluralità della attestazioni,* ed. Silvia Conte, Convegno internazionale, Venezia, 6-8 ottobre 2005 (Rome: Tillemedia, 2005),

Rustichello da Pisa only in the places where we find most medieval writers of Arthurian romance: in the prologue, formulaic transitions, and in a dubious epilogue included in MS fr. 1463.[41]

***

Rustichello establishes his *auctoritates* in the prologue of the *Compilation*. He, like countless other romance authors, says his work comes from sourcebooks that he found (*truevé*) in the collection of King Edward I of England.[42] But from the start, it is unclear exactly what Rustichello's role was as the author of the *Compilation*. Rustichello states that he is "putting in writing" (*mettre en ecrit)* or "compiling" (*conpiler*) or "translating" (*treslaité)*.[43] All of these terms give the reader the impression that Rustichello is merely reporting what he finds in the King's book, but not necessarily contributing any new material to it.[44] As Valeria Bertolucci Pizzorusso points out, this reference to a previously written source (and one often in Latin) could have been to an actual or fictitious sourcebook, but nonetheless, it is always insisted upon in romance.[45] It seems that Rustichello wanted to "avoid suspicion" that he was involved in

---

5-16. Furthermore, Cigni mentions that Dr. Jackie Gazzi searched the Public Record Office in London in the *Calendar of Patent Rolls (Henry III: 1266-1272)* and found trade documents dealing with Pisa that date July 29, 1271 and another February 24, 1272, in which a certain *Rustikellus* and a *Ianonus de Rusticacio* are recorded. Dr. Gazzi's findings are reported only in Cigni's notes on the *Compilation*. See Cigni, *Il Romanzo*, 14 n. 17.

[41] See Elspeth Kennedy, "The Scribe as Editor," in *Mélanges de langue et de littérature du Moyen Âge et de la Renaissance offerts à Jean Frappier*, vol. 1 (Geneva: Droz, 1970), 523-531.

[42] See Bertolucci Pizzorusso, "Enunciazione," 15-16. Medievalist Michel Zink writes that early romance authors often "tended to legitimize their work by calling attention to their role as cultural transmitters, responsible for the transferal of ancient Latin learning to those who could not understand it" [cited in Gabrielle Spiegel's *Romancing the Past: The Rise of Vernacular Prose Historiography in Thirteenth-century France* (Berkeley: University of California, 1995), 61].

[43] Rustichello states twice that he "translated" (*treslaité*) *Il Romanzo* (1:2 and 1:3), eight times that he "puts into writing" (*mettre en ecrit*) (16:12, 16:13, 16:16, 16:18, 39:16, 39:17, and 56:23) and twice that he "compiles" (*conpiler*) it (39:11 and 236:5).

[44] "Mes por ce que maistre Rusticiaus le truevé eu livre dou roi d'Engleterre tout devant, en fist il chief de son livre," *Il Romanzo*, 16:19.

[45] Valeria Bertolucci Pizzorusso, "Enunciazione," 15.

"autonomous literary invention" by citing that he did indeed have a valid source text.[46] Rustichello, however, unlike previous romance writers, found his *auctoritates* in the books of a king, and these books were not necessarily in Latin.

It is perhaps because Rustichello used an alternative sourcebook for his *Compilation* that he insists several times on the veracity of his own work. Rustichello repeatedly says that the "true history" (*verais estoire*) he tells his audience "affirms or testifies" (*les tesmoingne)* what he writes. Rustichello's insistence on truthfulness is more like a chronicler reporting historical fact rather than a romancer telling Arthurian tales.[47] Historian Gabrielle Spiegel brings up the interesting point that the rise of romance literature in prose was happening alongside "the parallel rise in vernacular historiography."[48] Moreover, these new forms of literature in prose "provided a new linguistic model of truth," now "based on written, not spoken, language."[49] However, Rustichello frequently blurs the lines between written and oral utterance. For example, he uses the phrase "the story says" or "tale says" (*dit li contes*), even more often than he uses the phrase "true history" in the *Compilation*.[50] Furthermore, as Sophie Marnette has observed, after 1200 there is a noticeable augmentation of performative expressions such as "*le conte dit que*" in prose works.[51] In fact, Rustichello states the expression "the tale says" (*li contes dit*) so many times in the *Compilation* that the "text" or "*conte(s)*" seems to become a separate entity or character in

---

[46] Spiegel, *Romancing*, 61.

[47] The term "true history" (*verais estoire*) is used five times in the *Compilation* (2:1, 39:10, 47:12, 52:5, and 163:1). But the common term "book" or "livre" is still also used, especially in chronicles such as that of Villehardouin. See Sophie Marnette, *Narrateur et points de vue dans la littérature française médiévale: une approche linguistique* (Bern: Lang, 1998), 97. In the *Compilation*, the textual object or "book" (*livre*) is indicated (four times in the prologue alone, and fourteen times in the epilogue) and over thirty times throughout the *Compilation*. Sometimes the book is referred to as "the book" or "this book," sometimes "his book," sometimes "our book," and one time in the epilogue as "my book".

[48] Spiegel, *Romancing*, 68-69.

[49] Ibid., 69.

[50] And the "story says" (*dit li conte(s)*) is used twenty times. See *Il Romanzo*, 2:1, 16:1, 40:1, 53:1, 56:1, 61:1, 72:1, 76:1, 81:1, 131a:1, 142: 1, 148:1, 158:1, 163:1, 172:1, 190:1, 196:1, 197:1, 199:1, and 232:1.

[51] See Marnette, *Narrateur*, 97.

this work. But whether Rustichello's audience believes in the veracity of what he writes, or in what "the story says," is somewhat of a moot point. As Marnette astutely notes, the writer (in this case Rustichello) is still in control of the text, and it is he who relays to us only the tales that he wants told.[52] Nonetheless, the many performative aspects in Rustichello's *Compilation* are undeniable, and as stated in the prologue, "one should have these tales read [to them] from beginning to end" *(et le feites lire de chief en chief)*, as if one were observing the recitation of a play.[53] Although the performative aspects of Rustichello's *Compilation* cannot be denied, the new models for prose writing insisted that he use a reputable sourcebook. If Rustichello did not use a valid source, his work would not reflect the "truth" and presumably would not be taken seriously.[54] However, because Rustichello uses performative aspects from romance combined with other expressions often used in historical writing, he leaves his audience wondering what exactly his role is in the *Compilation*.

Rustichello's role in the writing of the *Compilation* is complex, and at times it is also difficult to discern his narrative voice. He says that he will succinctly write down all the great adventures that happened at Camelot at the Court of King Arthur (*Mes si metra li maistre une grandismes aventures tot primieremant que avint a Kamaaloth a la cort dou roi Artus*).[55] Here, the verb *metre* in the third-person future tense seems to imply that Rustichello is certain he will write down these "great adventures." In fact, throughout most of the text it is not a first-person singular author who directly speaks or writes to his audience, but more of an omniscient *maistre Rusticiaus de Pise* who writes about himself in the third person. Nonetheless, it seems that medieval romancers usually wrote in the third-person historical present and not in the first-

[52] Marnette, *Narrateur*, 42-49.
[53] *Il Romanzo,* 1:1.
[54] Spiegel, *Romancing*, 68-69.
[55] *Il Romanzo,* 1:6.

person present when they wanted to voice their own opinions, actions, thoughts, or observations in their narration.[56] But in the Branor le Brun episodes, Rustichello often uses the future tense verbs describing his activity as a writer or compiler.[57] Hence, it stands to reason that when Rustichello uses the third-person future tense in these episodes, he is actually speaking in his own voice in the text.[58] Moreover, it is logical that Rustichello would have more to say in his original contribution to Arthurian romance found in the Branor episodes, and thus less to say about the episode that he is compiling. This is because in the Branor episodes Rustichello is adding original material to the vast compendium of Arthurian romance, which he does to a lesser extent when he is compiling excerpts from other romance texts.

In the Branor episodes, Rustichello uses the third-person future tense of the verb *"traitier"* ("to be concerned with" or "treat"). As Gaunt points out, "*traitera"* is a term usually found in historiography and not in romance.[59] Since this term is found *only* in the Branor le Brun episodes, it seems to indicate Rustichello's determination to establish himself as an original author and also to verbalize his own personal voice and thoughts. Since this section of the *Compilation* is Rustichello's unique contribution to Arthurian lore, it stands to reason that he would "be concerned with" rather than "compile" or "translate" this section of his work. Furthermore, by "this verb choice*"* Rustichello again speaks more like a historical chronicler

---

[56] Rustichello is not the first medieval romance writer to have a multivariate narrative voice, but he was certainly one of the first authors to do so in Italy. In the *Roman de Silence*, Heldris of Cornwall also refers to himself as both "I" and "he." For more on the unreliability of narrative voice in medieval texts; see F. Regina Psaki ed., "Introduction," in *Arthuriana. Special Issue: Essays on Le Roman de Silence* 7.2 (1997) (Dallas: Southern Methodist University Press), 3-6.

[57] Bertolucci Pizzorusso, "Enunciazione," 18.

[58] Sophie Marnette notes that indicative tenses such as the present and future used in medieval literature, along with compound tenses such as the passé composé and also the use of certain deictics, place the narrator in the story as an eyewitness to the account he is relating. Marnette, *Narrateur*, 161 and 214.

[59] "*Traitera*" or "to be concerned with" in the third-person singular future tense is found only in the Branor le Brun episodes of the *Compilation* (1:3, 1:4, 16:20, and 39:12), and also Gaunt, *Marco Polo*, 48 fn. 13. However, Rustichello also uses the third-person singular future "to speak" or "*parler*," and in this case "*pallera*" is used quite frequently in the *Compilation;* see the use of "*pallera"* in *Il Romanzo*, 39:11, 60:16, 62:21, 76:15, 141:25, 147:22, 147:25, 157:14 (twice), 162:13, 163:3, and 193:2.

than an author of a prose romance.[60] But as mentioned above, Rustichello's style in much of the *Compilation* resembles historical chronicles rather than romance. Both Marnette and Gaunt give the examples of the Old French crusader chronicles of Robert de Clari and Geoffroi de Villehardouin, who use language similar to that of Rustichello in his romance text.[61] Gaunt compares Rustichello and Marco Polo's collaborative writing to these two Old French chronicles as if this was a new style for Rustichello, yet it seems that Rustichello was already writing like a historian or chronicler in his earlier Arthurian *Compilation*.[62] Moreover, since Rustichello was presumably borrowing the books of a king who was going to or returning from a crusade (Edward), it makes sense that Rustichello would in some ways mimic crusader chronicles in prose to acknowledge his patron's service to the Church. Rustichello the "*maistre*" writes in the third person, just as Villehardouin and Clari did. Likewise, like Villehardouin and Clari Rustichello presents himself as a witness and guarantor of the "true" account of what he is relaying to his audience."[63] Furthermore, as Spiegel has argued, when Rustichello insists on the veracity of his tales as previous prose historians did, he once again blurs boundaries between history and romance as he inverts "the traditional relationship between the historical 'truth' of the past and the imaginative 'truth' of fiction."[64]

---

[60] *Il Romanzo*, 2:1, 16:1, 40:1, 53:1, 56:1, 61:1, 72:1, 76:1, 81:1, 131a:1, 142: 1, 148:1, 158:1, 163:1, 172:1, 190:1, 196:1, 197:1, 199:1, and 232:1.

[61] Gaunt invokes Clari and Villehardouin's style of historical writing when he tries to distinguish Rustichello from Marco Polo's narrative voice (*Marco Polo*, 46-47). Gaunt's observations are based on Marnette's previous work on Clari and Villehardouin (*Narrateur*, 42-43, 55- 56, 69, 97, 100, 103-104, 196, and 220). Geoffroi de Villehardouin (1160–1212) was a knight in the Fourth Crusade and wrote the first historical prose narrative in French; Robert de Clari (1170?-1216?) was also a knight-chronicler of the Fourth Crusade but not a noble like Villehardouin, so Clari's chronicle is particularly insightful because we have few chronicles that were written by non-nobles. That is to say, because Clari, like Rustichello, was not a noble his style might be more similar to that of Rustichello.

[62] Gaunt, *Marco Polo*, 54.

[63] Marnette, *Narrateur*, 42 and 101.

[64] Spiegel, *Romancing*, 64.

Rustichello writes his fictional account of Round Table Knights as if it were historical fact. But why does he do this? And why does he only concerned with (*traiter)* the Branor le Brun episodes? I believe that when Rustichello is not compiling but adding new material to his *Compilation*, he wants to tell his own story, which takes the shape of a veiled political allegory found only in his original episodes of Branor le Brun. Rustichello presents the Branor section of his work as a historical chronicler would, professing that his sourcebook was from the collection of King Edward. Both the presentation of his work as a historical chronicle and saying that his source was from the book of a king lend legitimacy to his message of political discontent, which is what I believe he is trying to express with the Branor episodes. Moreover, when Rustichello makes his work seem historical and factual, he also hides the fact that he is a political dissident and is calling for the overthrow of an oppressive regime. This political allegory will be discussed fully in Chapter 3, dedicated specifically to the Branor le Brun episodes.

We have Rustichello acting or writing in the opening episodes like a pseudo-historian or chronicler, but when is he a traditional romance writer? We find Rustichello "the romancer" in the formulaic transitions found in the *Compilation.* Here he speaks directly to his audience with first-person "I" narration, which is often found in the stock formulae of romance writers. The "*je*" or "I" in the "as I told you (pl.)" and many similar phrases punctuate the *Compilation* and remind Rustichello's reader of his presence.[65] Hence, when Rustichello uses the first-person singular pronoun "I" in these addresses to his audience (and not in direct speech), it is the voice of Rustichello the romancer. Furthermore, the frequent presence of "you (pl.)" (*vos/voz*) in these phrases helps to both include the audience and also seem to serve a pedagogical function.

[65] *Il Romanzo, con je vos di* (231 :1), *con je vos ai contés* (74:3, 82:3, 88 :1, 92:1, 95:14. 126:3, 142:5, 170:4, 180:1, and 180:5) ten times, *car je vos di que* (190:12), *car je vos di tot voiremant que* (196 :17), *je vos di bien* (217.10), and *en tel guise con je vos di* (231.1), *et si voz dirai* (96:27), or the interrogative *et que voz en diroie*? (5:10, 6:5, 14:3, 14:14, 19:10, 19:25, 21:22, 22:20, 23:9, 23:19, 23:29, 25:21, 32:22, 37:1, et. al. for a total of fifty-one times throughout the manuscript.

Rustichello, like many romance authors, feels the need to convey knowledge to his audience and uses the formulaic phrasing in the second-person plural imperative form of "*savoir*" or "to know" (*sachiez*).[66] Before or after relating an episode, he frequently exhorts his reader to "know" or "know now," much as a teacher would examine his students on a lesson that was just taught. Also, much like a teacher, Rustichello is constantly explaining the actions of his characters. When Rustichello uses his favorite transitional phrase "And when" (*et/e quant*), he not only holds together what at times seems to be a disconnected series of Arthurian episodes; he also gives a step-by-step narration of the action of his work.[67] Furthermore, this linking word helps Rustichello pick up on any of the numerous stories that he has temporarily set aside but wants to weave into his work (*entrelacement*). With these stock romance phrases and transitions, Rustichello guides his reader and audience through his *Compilation*, while assuring Rustichello's audience that what they are hearing or reading is a romance and not a chronicle.

Thus do we find the complex and mysterious Rustichello da Pisa in the prologue and formulaic transitions. The epilogue to MS fr. 1463, by contrast, was not necessarily a part of Rustichello's *Compilation* because this work did not have a definitive conclusion. Moreover, after Episode 196 in MS fr. 1463, if this is indeed still Rustichello, he assumes the role(s) of compiler or translator and is no longer the original composer found, for example, in the Branor le Brun episodes. The episodes after 196 are portions compiled from the *Lancelot and Tristan en*

[66] The use of "*savoir*" is also frequently used in the chronicles because the narrator allows his audience to experience a certain type of "knowledge" that the chronicler shares with them. See Marnette, *Narrateur,* 69. "*Sachiez*" used by the narrator of the *Compilation* and not in the direct speech of the characters (*Il Romanzo,* 1:2, 1:4, 2:2, 3:1, 3:3, 3:5, 3:6, 6:3, 14:14, 16:18, etc.) almost a hundred times. .

[67] Rustichello uses the transitional phrase "*et/e quant*" over 600 times throughout the course of the *Compilation.* For other examples of typical transitional phrases used by Rustichello, see Bertolucci Pizzorusso, "Enunciazione," 37.

prose.[68] Although MS fr. 1463 ends with the death of Tristan, not all redactions of the *Compilation* do so, and the epilogue tacked on the end is decidedly not written by Rustichello, the original author of Arthurian prose romance.

In the epilogue to this work, the author proceeds to thank his patron, "King Henry of England" (*li roi Henrinz d'Engleterre*).[69] King Henry was Edward's father, who died in 1272 before Edward returned home from crusade. Henry was not known to be a great patron of literary works, and he never went to Italy. Furthermore, it is strange that Rustichello would suddenly forget who his patron was, or at least from whom he borrowed his sourcebook for the *Compilation.* Furthermore, in this epilogue Rustichello suddenly identifies himself in the first person as the romance writer "Hélie de Boron" (*et je meïsmes que sui apellés Helyes de Boron*), whereas previously in the prologue he had referred to himself in the third person as "*maistre Rusticiaus de Pise*."[70] Since it is unlikely that Rustichello suddenly forgot his patron and even his own name, this is probably a section of the *Compilation* that Rustichello directly compiled or translated from Edward's book, or was added by whoever fabricated the manuscript. Hence, we cannot find Rustichello's narrative voice in the epilogue attached to his work.

Perhaps the key to both the complicated text and author is that they both occupy liminal spaces. The text is "liminal" in that it is a combination of different romance works (mainly the *Tristan en prose*), languages (Franco-Italian), and genres (romance, history, and didactic fiction). On the other hand, Rustichello and his narrative voice are "liminal" in that he seems to be assuming rival roles as romancer, historian, and teacher. Hence, it is not so much a question of

---

[68] Cigni believes Rustichello's original *Compilation* stopped at episode 196 (adventures of Palamedes and Sigurant) and that a later compiler added the last adventures of Tristan, Tristan's death scenes, and the epilogue. Cigni, *Il Romanzo*, 13.

[69] *Il Romanzo*, 236:3. Henry III will be discussed more fully in Chapter 2 on Edward I.

[70] In MS fr. 1463 the author of the text refers to himself as "Hélie de Boron" in the epilogue (*Il Romanzo*, 236:5) and as "maistre Rusticiaus de Pise" in the prologue (*Il Romanzo*, 1:3).

finding Rustichello's narrative voice in the *Compilation*, but more of figuring out which voice he is using and why he does so. Is Rustichello a classic romancer who sprinkles a battery of stock phrases throughout his work to remind us that this is Arthurian romance? Is he a dictating historian who pretends he was an eyewitness to the tales he reports? Is he the pedantic scholar who insists on his audience learning from what he writes? While Rustichello's multiple narrative voices may be unsettling to modern readers, it apparently was not so for Rustichello's contemporary audience that, like his voice, was probably also varied.

PHYSICAL DESCRIPTION OF BNF MS FR.1463

Apparently a modern reader (perhaps a librarian?) wanted to both historicize and also preserve the link between King Edward and Rustichello for future readers of MS fr. 1463 by adding an inscription to the manuscript. Thus, on fol. 5v, written in a modern (probably fifteenth- or sixteenth-century) hand is written: "*Edouard passa en* [word crossed out] *Syri en 1268/9 et revint en 1272 après la mort de Henry III auquel il succeda*" (Edward went through [deletion] Syria in 1268/69 and [returned] in 1272 after the death of Henry III whom he succeeded). [Figure 3][71]

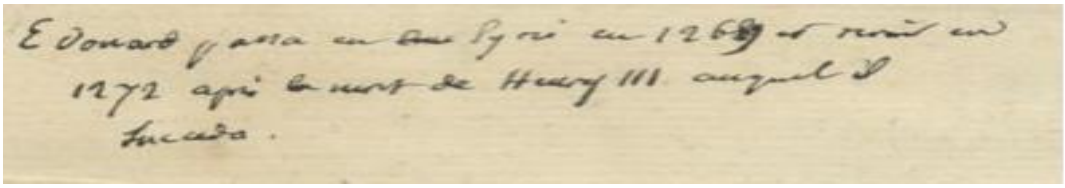

Fig. 3, f. 5v, MS fr. 1463. This fifteenth- or sixteenth-century inscription briefly records King Edward's movements from 1269-1272.

[71] Cigni, *Il Romanzo*, 18.

It seems that this unknown annotator (most likely a librarian) wanted to historicize the *Compilation* to give credence to Rustichello's claim that he could borrow Edward's books. However, in 1269-1272 Edward was not yet a king; it was *Prince* Edward I of England who went on crusade in 1270 and not 1269, only to return home to England as a king in 1274. Hence, whoever wrote this inscription was slightly mistaken on the dates of Edward's rule as well as of his crusade. What we do not know is whether Rustichello borrowed Edward's book when the latter was going to, returning from, or actually in the Holy Land. Some scholars believe that Rustichello accompanied Edward on crusade; others think that Rustichello was an attaché to one of the southern courts in Italy (probably Sicily), and still others think that Rustichello met Edward on his return voyage to England from the Crusades.[72] All of these hypotheses are feasible, but none has been definitively proven with the existing historical documents.

BnF MS fr. 1463 dates from the end of the thirteenth century or beginning of the fourteenth (1290-1310) and was written on thick vellum, which measures 305 x 205 mm with 106 folios in quarto.[73] The parchment is of an inferior quality; the first scribe and possibly illuminator worked around holes and tears already found in the parchment. Additionally, many of the folios are damaged, and some of these folios were repaired in blue thread at a later date.[74] The pages are numbered in pencil in a modern hand on the upper right-hand corner of each page, and these "new" numbers cover the original pagination of the manuscript but reflect the actual current pagination of MS fr. 1463. A folio is missing between ff. 58*v* and 59*r*, and yet another

[72] Jacques Monfrin in his *Études de philologie romane* (Geneva: Librairie Droz S.A. [Société Anonyme d'Edition], 2001) writes with certainty that King Edward met Rustichello when he was staying in Sicily on his return voyage from the Crusades (p. 515). The connections between Edward and Rustichello da Pisa's *Compilation* will be discussed more fully in Chapter 2.

[73] Hence, BnF MS fr. 1463 is quite short compared to other Rustichellian compilations. MS fr. 1463 contains 106 folios, but BnF MS fr. 340 and BnF MS fr. 355 are much longer (204 ff. and 413 ff., respectively).

[74] Folio numbering reflects the actual numbering indicated in MS fr. 1463.The folios that are especially damaged are ff. 72, 74, 80, 86, and 94. A couple of the folios have been repaired in blue thread are (ff. 4 and 78).

seems to have fallen out and then been put back into the manuscript out of place (f. 94).[75] The text is written in a Gothic script or *littera textualis* in two columns with 38-42 lines per column. The handwriting is the same throughout and seems to be the work of a single scribe. However, a modern hand (fifteenth century) filled in all the missing or faded letters of the manuscript for the sake of readability.[76] The fact that someone bothered to fill in missing or faded letters demonstrates that this manuscript was still being read over one hundred years after its production.

The flyleaves at the beginning and end of the manuscript are made of paper, and although few lead words are used in the manuscript, there is red and blue rubrication throughout.[77] Likewise, there are many decorated initial letters at the start of sections with flourished filigrees in the margins [see Figure 4].[78]

Fig. 4, f. lv, MS fr. 1463. An example of decorative initial letter in blue and red from the first page of Rustichello's *Compilation* (enlarged to show detail). Here the episodes of Branor le Brun start.

[75] Cigni, *Il Romanzo*, 18.
[76] Ibid., 18.
[77] Lead words appear on the following folios: 14*r*, 22*r*, 36*r*, 50*r*, and 79*r*.
[78] Cigni, *Il Romanzo*, 18-19.

The manuscript also features many illustrations of kings, knights, horses, the occasional lady, and castles. All figures are in red, brown, green, black, yellow, or purple. These images are fairly generic and mostly depict knights fighting each other in battle or jousts; without the vivid coloring of the knights' armament, it would be difficult to determine who is fighting whom in the manuscript. Indeed, the only way to tell the knights apart is by the color of their armor because the fighting knight images are so similar to one another. A later editor or reader (fifteenth century?) seems to have solved the problem of distinguishing between the different knights by inserting the knights' names next to or above their heads.[79] In the jousting scene with Branor le Brun we can make out the word "*ancien*" on the upper right-hand corner to distinguish him as the "Old" Knight [Figure 5].

Fig. 5, f. 3r, MS fr. 1463. Branor le Brun fighting a knight. He is indicated as "ancien," as he is known throughout the text as the "viel chevalier" or Old Knight.

A few large battle scenes are also depicted in the manuscript and cover entire folios. Due to their dimensions and the size of the text that surrounds them, it seems that these were planned in the layout of the manuscript.[80] However, two of the folios contain three illustrations that seem

[79] Cigni, *Il Romanzo*, 18.
[80] Larger images are on ff. 69*r*, 70*v*, 86, 88*v*, and 104*v*.

to be in a different and also later hand (probably fifteenth or sixteenth century).[81] These later images differ in style, design, and also color (ochre, mauve, and brown ink instead of the bright greens and reds used in the rest of the manuscript). Likewise, these illustrations are thought to be later additions because they are squeezed into the very bottom margins of the page, while the "planned" illustrations in MS fr.1463 have ample space and are framed by the text.[82] For comparison of the "planned" or older images and the fifteenth or sixteenth-century additions, see Figures 6 and 7.

Fig. 6, f. 69r, MS fr. 1463. An example of a planned, older, and larger image of a battle scene with the use of vibrant greens and reds as found in the majority of images in MS fr. 1463.

[81] The later images are on ff. 20*v*, 21*r*, and 21*v*; see Cigni, *Il Romanzo*, 18.

[82] Muriel A. Whitaker comments on the specifically Italian penchant for large illustration sprawled across the bottom part of one or even both pages in a manuscript; see M.A. Whitaker, *The Legends of King Arthur in Art* (Woodbridge, Suffolk: D.S. Brewer, 1990), 55 and 65, respectively. This could mean that these later images were added by an Italian illustrator, since Italian artists often placed images on the bottom margins of manuscript pages.

Also, a more recent (fifteenth century?) image is crowded onto the bottom margins of the page and not embellished with the vibrant colors of the planned images [Figure 4].[83] Compared to Figure 5:

Fig. 7, f. 21v, MS fr. 1463. An example of a newer image (probably fifteenth century) added later to the manuscript.

BnF MS fr.1463 was originally in the Mazarin Library in Paris (n. 33 of that catalog) and has a modern binding in leather with the title *Roman de Tristan* written in gold on the spine.[84] This modern binding indicates that the bulk of Rustichello's *Compilatio*n was comprised of borrowings from the *Tristan en prose*, and hence is labeled as such.

As to the origins of the actual manuscript, there are divergent opinions. P. Toesca and Roger Sherman Loomis and Laura Hibbard Loomis placed MS fr.1463 in the Po valley.[85] Others scholars such as F. Saxl, Bernard Degenhart, Annegrit Schimitt, and Alessandra Perriccioli-

[83] For limited information on the images in MS fr. 1463 see: Cigni, *Il Romanzo,* 18-19, Fligelman Levy, "Livre de Meliadus," xxix ; Marie-Thérèse Gousset, "Etude de la décoration filigranée et reconstitution des ateliers: le cas de Gênes à la fin du XlII^{e} siècle," in *Arte Médiévale*, II 1987-88, 121-52, and and François Avril, Marie-Thérèse Gousset, and Claudia Rabel, *Les manuscrits enluminés d'origine italienne*, t. II, *XIIIe siècle* (Paris: Bibliothèque Nationale, 1984), 46.

[84] Cigni, *Il Romanzo,* 18.

[85] On assignments to the Po valley, see P. Toesca, *La pittura e la miniatura nella Lombardia* (Milan: Hoepli, 1912), 377-83, and Roger Sherman Loomis and Laura Hibbard Loomis, *Arthurian Legend in Medieval Art*, pt. II (London: Oxford University Press, 1938), 120, fig. 335-36.

Saggese place MS fr.1463 in Angevin Naples.[86] Moreover, other scholars such as Paul Meyer, François Avril, and Fabrizio Cigni have placed this manuscript in the Pisa-Genoa axis, which is today the most accepted hypothesis as to the origins of the manuscript.[87] Nonetheless, even this collocation is Northern Tuscany is problematic. As manuscript curator Albert Derolez states:

> [I]n most cases, these geographical specifications are not derived from any special characteristic of handwriting but from the place of origin of the manuscript or document. As long as they cannot be demonstrated to indicate the presence of distinctive features different from the script of other areas, such specifications are useless, even deceptive.[88]

But what does "the Pisa-Genoa axis" mean? Roberto Benedetti concludes that the only real "distinctive" feature in the group of manuscripts from the said Pisa-Genoa axis is the so-called Genovese style and ornamentation of letters typical of western Tuscan draftsmen.[89] Along the same lines, Cigni reiterates that "the subtle filigreed ornamentation of the initial letters of the manuscripts," was only done by Ligurian ateliers although this sort of ornamentation was later copied by Lombard scribes.[90] But before all of these authors, in 1984 Maria Luisa Ceccarelli

---

[86] For assignments to Naples, see F. Saxl, "Il romanzo di Troia nell'arte francese e italiana" in *La storia delle immagini* (Bari: Laterza, 1982), 31-45; Bernard Degenhart and Annegrit Schimitt, *Frühe angiovinsche buchkunst in Neapel. Die illustrierung französischer uterhaltungsprosa in neapolitanischen scriptorien zwischen 1290 und 1320*," in Friedrich Piel and Jörg Traeger (eds.) (Tübingen: Frestschrift Wolfgang Braunfels, 1977), 71-92; and Alessandra Perriccioli-Saggese, *I romanzi cavallereschi miniati a Napoli* (Naples: Soc. Ed. Napoletana, 1979), 28, 59, 76, pls. L-LVI.

[87] For assignments to the Pisa/Genoa axis, see Paul Meyer, "De l'expansion de la langue Française en Italie pendant le Moyen Âge," in *Atti del congresso internazionale di scienze storiche*, 4 vols, I (Rome: Accademia dei Lincei, 1904), 61-104 and François Avril et al., *Les manuscrits*, 62-111.

[88] Albert Derolez, *The Palaeography of Gothic Manuscript Books: From the Twelfth to the Early Sixteenth Century* (London: Cambridge University Press, 2003), 16.

[89] Roberto Benedetti, "*Qua fa' un santo e un cavaliere… aspetti codicologici e note per il miniature."* In Aldo Rossellini (ed.), *La grant queste del Saint Graal (la grande ricerca del Santo Graal). Versione inedita della fine del XIII secolo del ms. Udine, 177* (Udine: Treicesio, 1990), 31-47.

[90] ". . . la caratterstica ornamentazione filigranata delle lettere iniziali dei manoscritti, la cui appartenenza esclusiva ad ateliers liguri sembrerebbe da considerarsi sicura, nonché ritalgiata in un arco di tempo ristretto. Quest'ornamentazione italiana, che influenzerà codici lombardi degli inizi del XIV sec., si differenzia in modo sottile ma netto da quella di coevi manoscritti francesi . ." see Cigni, "La ricezione medievale della letteratura Francese nella Toscana nord-occidentale," in *Fra toscanità e italianità. Lingua e letteratura dagli inizi al*

Lemut demonstrated that there is solid evidence that many copies of late thirteenth- and early fourteenth-century manuscripts were written by Pisan citizens jailed in Genoa after the Battle of Meloria (1284-1299).[91] Hence, it is possible that given the earliest date of MS fr. 1463 (1290-1310) and Rustichello's imprisonment in Genoa until 1299, that he could have had a hand not only in the writing but also in the editorial process of drafting manuscripts (such as MS 1463 of his Arthurian *Compilation*). If Rustichello was partially involved in the editorial manufacture of manuscripts along with other fellow prisoners, this could explain the many diverse narrative voices found in the text as various copyists, scribes, rubricators, and illuminators were tasked with different jobs.

Unfortunately, no one knows exactly where MS fr. 1463 was made or who exactly made it. Nonetheless, most scholars now agree that it was fabricated in an Italian *scriptorium* somewhere in Tuscany.[92] This hypothesis is consistent with the fact that Rustichello's work was most popular in northern Italy and France, where Franco-Italian manuscripts were most prevalent. Furthermore, the language of MS fr. 1463 (a Franco-Italian with accents of Tuscan) seems to indicate that in all probability, MS fr. 1463 was written in western Tuscany or perhaps in nearby Liguria (Pisa or Genoa) by a Tuscan copyist.

This chapter has offered a brief introduction to its author, Rustichello da Pisa, and briefly elucidated the choice of my primary text (the version of the *Compilation* preserved in MS fr. 1463). I highlighted some of the salient problems that surround this complex text, such as problems in attribution of text and manuscript, language, authorship, and the lack of criticism for

---

Novecento, Atti dell'Incontro di Studio Halle-Wittenberg, Martin Luther Universität, Institut für Romanistik, May 1996, ed. E. Werner et al. (Tubingen-Basel: 2000), 84.

[91] See Ceccarelli Lemut, "I Pisani prigionieri," 75-88. Cigni also highlighted this same point in his article, "Copisti prigionieri,"425-39. However, Gaunt seems to think that writing in prison could be merely a literary trope; see Gaunt, *Marco Polo*, 16, fn. 58.

[92] Around 30 manuscripts in French, Italian, and Franco-Italian in the "cortese" prose have been traced to one Italian scriptorium in the Pisa-Genoa axis. See Cigni, "Manuscrits en Français," 187-217.

this text. Now that we have established that MS fr. 1463 is the manuscript closest in time (1290-1310) and probable place of origin (Pisa-Genoa axis) of the author, we can now move on to an interpretation of Rustichello's original contribution to Arthurian literature: the Branor le Brun episodes. Hence, the next chapter will examine the inspiration for Rustichello's original episodes of Branor le Brun: King Edward I of England.

Chapter 2 -- Edward I: Rustichello's Reborn King Arthur

In order to understand the ideological function of Rustichello's *Compilation* for what is likely to have been its original courtly audience, one must also understand the tenuous position of the Plantagenet King Edward I with the British nobility when he ascended the throne in 1274. After the disastrous reign of his father, Henry III,[1] Edward needed to discover something that would unite both his people and his court. This was by no means an easy task, since his court was a multicultural group and by no means a strictly "English" body. Edward immediately recognized the need for a unifying narrative that would legitimize his rule, and he found that "unifying" element for his kingdom in the form of the story of King Arthur.

Edward's court was comprised of French, Spanish, Italians, Savoyards, Lusignans, Dutch, and some native-born Englishmen.[2] One of the only unifying aspects of Edward's court was that most of the people there spoke French and knew the stories found in Arthurian romance. As literary scholars Ad Putter and Keith Busby note, "French was the native idiom of the

---

[1] Edward's father Henry III was a weak but very pious king who rarely traveled outside of England. Henry has the reputation of being a terrible king, but he was often misled by bad counselors who favored foreigners over English lords (mainly the Lusignans and Savoyards related to his wife, Eleanor of Provence). Henry's reliance on foreign counselors severely damaged his relationship with his own people. In fact, his only real contribution to England was the work he commissioned at Westminster Abbey and the establishment of his patron saint, Edward the Confessor (and the name of his firstborn son, Edward I). See F.M. Powicke, *King Henry III and the Lord Edward: The Community of the Realm in the Thirteenth Century,* vol. 2 (Oxford: Clarendon Press, 1950), 565-589. Powicke points out that despite the dedication at Westminster which showed Henry's piety and patronage, Henry had alienated himself from his subjects and, as Galbraith has emphasized, "the consolidation of 'national' feeling during the mid-century years of opposition to Henry III's [was due to his] preferment of Poitevins to high offices" See V.H. Galbraith, "Nationality and Language in Medieval England," *Transactions of the Royal Historical Society (TRHS),* 23 (1941), 124. Hence, it seems that Edward was determined to do whatever it took to not rule as his father had, and he returned most high offices to native-born Englishmen. See Elizabeth Salter, *English and International Studies in the Literature, Art and Patronage of Medieval England,* ed. Derek Pearsall et al. (Cambridge: Cambridge University Press, 1988), 35.

[2] Edward was born in 1239 to a French mother, Eleanor of Provence, and King Henry III. For all intents and purposes, Edward would today be considered more "French" than "English." As historian Sandra Raban points out, "by blood, mother tongue and culture he [Edward I] was almost entirely French, a heritage only leavened for Edward II (Edward I's son), by a Spanish mother." See S. Raban's *England under Edward I and Edward II, 1259-1327* (Oxford: Blackwell Publishers Ltd., 2000), 135.

conquerors," and it was "used on a daily basis for both practical and cultural purposes."[3] Moreover, although most everyone at King Edward's court spoke or understood French, very few of his courtiers (like the King himself) had actually been born in France. In such a cosmopolitan court, there was no concept of "national identity" as it is understood today. In fact, the French language was one of the few unifying forces that gave some stability to the ruling class of England or at least allowed them to communicate with one another.[4]

French was a unifier mainly for the genteel classes of society, but it affected all classes of society in England because it was increasingly the "legal" language used in charters, petitions, memoranda, lawyer's manuals, and writs from the mid-thirteenth century until at least the mid-fourteenth century.[5] It seems that most people from all walks of life in England in the late thirteenth century were at least partially bilingual. In the countryside of England in the thirteenth century, some people spoke a form of English, and others a form of French. Furthermore, many probably spoke and understood more than one of these languages; i.e., they were "partially" bilingual. As medievalist Hope Emily Allan elucidates, the twelfth century passed into the thirteenth century and "no sharp demarcation could have existed of social distinction between the two languages" (i.e., English and French).[6] Commenting on the multilingualism of the English people, historian Michael Clanchy gives the example of a thirteenth-century sheriff receiving a royal message that "might have been spoken by the king in French, written out in Latin, and then

---

[3] See A. Putter and K. Busby, "Introduction," in *Medieval Multilingualism*, 8.

[4] Conversely, Thorlac Turville-Petre, believes that starting with Edward's father, English monarchs started to promulgate vernacular English in order to reach a wider sector of society and help spread political reform. Edward continued the work of Henry III when he condemned the French attack of 1295 and accused them of trying to destroy the English language. Nonetheless, "the triumphant emergence of the English language of national culture" over a half a century before the beginning of the Hundred Years' War seems premature when law courts were still in French and Latin and the nobility still spoke in French in the late thirteenth and early fourteenth centuries (vii). See T. Turville-Petre, *England the Nation: Language, Literature, and National Identity, 1290-1340* (Oxford: Clarendon Press, 1996), 1-27.

[5] See M.T. Clanchy, *From Memory*, 208-209.

[6] Hope Emily Allan, "Mystical Lyrics, of the *Manuel des Pechiez," Romantic Review* 9 (1918), 178.

read to the recipients in English."[7] The point is that no one under the reign of Edward I thought of themselves as strictly "English" or "French" on the basis of language or birthplace. Furthermore, as historian F.M. Powicke reiterates, Edward "had no comprehension of what we call nationalism."[8] Nonetheless, Edward realized early on that he had to distance himself from the reign of his father Henry III and try to create an ideal kingship. To do so, he needed to discover a unifying element that would "speak" to all.

One of the tools he used to help unify his kingdom was the emulation and invocation of the figure of King Arthur, the most famous King in all of Britain. Edward, and England for that matter, did not have a strong role model for leadership in the figure of Edward's father, Henry III. To name a few of Henry's shortcomings: he nearly bankrupted England through disastrous wars, nearly lost the kingdom to Simon Montfort in the Barons' Wars, and also lost almost all the remaining English holdings in France.[9] But Henry III also had in turn a poor role model for leadership in his own father, King John Lackland, who lost almost all the English holdings in France and was greatly despised by his subjects. Edward needed to be seen as a strong and capable leader much unlike his predecessors. Hence, Edward turned to King Arthur as the ideal model for kingship because he was honorable, loyal, courageous, and benevolent, virtues that had been lacking in the recent kings of England. Perhaps these were the virtues that Edward remembered from the tale of an old knight that he once heard while on crusade from a Pisan notary named Rustichello da Pisa. However, before delving into the connections between

---

[7] M.T. Clanchy, *From Memory*, 206.

[8] Powicke, *King Henry III*, vol. 2, 514.

[9] Rosalind Wadsworth notes that there is a complete absence of Arthurian lore in Anglo-Norman romances written under the patronage of the barons from 1170-1300. This places Arthurian lore, at least in England, squarely with the ruling aristocracy. See R.M. Wadsworth, "Historical Romance in England: Studies in Anglo-Norman and Middle English Romance," (unpublished PhD thesis, York, 1972), 325. Furthermore, Elizabeth Salter notes that this "reflects the consciousness of a 'royal and Arthurian' cult: the deliberate avoidance of that area of narrative by writers catering for a class of patrons who were frequently in opposition to the crown" (E. Salter, *English*, 95).

Rustichello's *Compilation* and Edward I, it is necessary first to explore Edward's early life and education, which molded his character, interests, and propensity for legitimizing his kingship through the use of Arthurian lore. As much as possible, we will be following his reign chronologically and can trace Edward's increasing use of the Arthurian tradition throughout his reign. Nonetheless, I leave it up to the reader to decide whether or not Edward used the figurehead of Arthur as a form of political propaganda or if he actually believed in the legends of England's most renowned king.

Roger Loomis' pioneering 1953 article "Edward I, Arthurian Enthusiast" documents many examples of Edward I's interest in all things Arthurian.[10] In fact, there are so many references to Arthur in Edward's reign that it would be difficult not to acknowledge all the ways in which Edward intentionally or unintentionally linked his kingship to the past deeds of King Arthur. Again, he did this not only to distance himself from the dreadful rule of his father, but also to find a unifying element in England in the figure of King Arthur. Edward partially relied on Arthurian legend to establish his own dynasty with his cosmopolitan approach to Arthurian legend.[11] This "cosmopolitan approach" consisted of Edward's use of King Arthur as a figurehead—an appropriation that anchored his reign to a historical context already known, loved, and fairly well accepted as factual by the rest of Europe through the popularity of Arthurian romance in the thirteenth and fourteenth centuries. Edward I started the process of institutionalizing the Arthurian legend as a political and nation-building force that influenced

---

[10] See Roger Sherman Loomis, "Edward I, Arthurian Enthusiast," *Speculum* 28.1 (1953): 114-27.

[11] Likewise Patricia Ingham argues for that the stories of King Arthur were used to unify and create a central power in late medieval England. However, her use of postcolonial theory seems somewhat out of place in Edward's reign as his recurrent difficulties with the nobility attest to the fact that England at this time was not a centralized society for an example of this, see the paragraphs on the Barons' War pgs. 83-84 of this dissertation. Also P. Ingham, discusses this point in her *Sovereign Fantasies: Arthurian Romance and the Making of Britain* (Philadelphia: University of Pennsylvania, 2001), 2.

many aspects of his reign.[12] It has not been previously noted, Edward utilized Arthurian themes, lore, and traditions in his reign only after his encounter with Rustichello da Pisa.

EDWARD'S LITERARY TASTES

Edward read in French and English, and he probably knew a little Latin for administrative purposes and communication with the Church. His only literary attribution is Rustichello's *Compilation* in Franco-Italian. That is to say, Rustichello is the only author known to have specifically mentioned Edward in his text. Nonetheless, it seems that Edward came from a long line of patrons of literature. As philologist Andrea Fassò notes, "the poetry and ideology of the courts developed above all in the Plantagenet territories." [13] Although there is no evidence that Henry III sponsored much literature; there was already an established tradition of Plantagenet literary sponsorship starting with Edward's great-grandfather, Henry II. Furthermore, since the Plantagenets were decidedly more "French" than "English," much of the literature under their patronage was in French or Anglo-Norman.[14] Moreover, if Edward enjoyed romances, chivalric poems, or Arthurian lore, these interests most likely originated with his mother, Eleanor of Provence and perhaps his grandmother, Blanche of Castile. In fact, a *Tristan* by Thomas was probably written for Edward's mother Eleanor, and this version of Eleanor's *Tristan* was still being copied in the first half of the thirteenth century.[15] Historian Michael

---

[12] See Salter, *English,* 96, for the institutionalizing of Arthurian legend in Edward's reign. Edward was the first king to use the legends of King Arthur to further his own political interests, even though the earliest story of the life of King Arthur was written by Geoffrey of Monmouth in his *Historia Regum Britanniae* around 1135. Also, Sara Cockerill writes that Edward I was able to read but not to write. She is the only author that I have found that makes such a bold claim. I assume she states this because there are no extant letters in Edward's own hand; see Sara Cockerill, *Eleanor of Castile: The Shadow Queen* (Gloucestershire: Amberley, 2014), 39.

[13] "For more information on the literature found in the Plantagenet territories, see Andrea Fassò, "La lotta," 87.

[14] The Plantagenets ruled England from 1154 starting with the reign of Edward's great grandfather Henry II until 1485, after the Lancasters were defeated in the War of the Roses. Although Edward spoke predominantly in French, he also knew how to speak some English.

[15] Salter, *English,* 89.

Prestwich agrees that Edward's mother "possessed romances in French and Edward may have gained a taste for such works from her."[16] However, Edward may have also become interested in romance and chivalry because of his wife, Eleanor of Castile.

Edward married Eleanor at the age of fifteen (1254)[17] and received his knighthood from her half-brother, King Alphonso X.[18] It seems that Edward's wife Eleanor, his mother Eleanor, and his father Henry all liked reading chivalric literature in French.[19] However, as medievalist Elizabeth Salter notes, it is difficult to identify the books that the royal family read because few works still exist.[20] Additionally, there are no extant book catalogs for the libraries of Eleanor of Provence, Eleanor of Castile, or Edward himself. However, the Pipe Rolls of 1237 record a payment for silver hasps and a key to be made for his father King Henry III's "*magnum librum of romance"* or "great book of romance."[21] Henry's "great book" was probably a compendium in

---

[16] See Michael Prestwich, *Edward I* (Berkeley: University of California, 1988), 6. E. Salter mentions that Edward's mother, Eleanor of Provence, also had the religious poem *Rossignos* dedicated to her by her clerk, John of Howden. Eleanor also had Mathew Paris translate into Anglo-Norman the Latin prose life of St. Edward the Confessor. See E. Salter, *English,* 90-92.

[17] Eleanor of Castile seems to have been very active in literary activities, which can be gleaned from her personal letters, the books dedicated to her, and the books from her scriptorium. Forty-seven personal letters survive, but most of these are for business purposes, with the exception of a note to the abbot of Cerne thanking him for lending her a book (55). Likewise, the illuminated *Douce Apocalypse* manuscript was owned by Edward and Eleanor (86). Also, Eleanor made a request to John Pecham, Archbishop of Canterbury, for a copy in Anglo-Norman of his treatise on pseudo-Dionysius' *De Celesti Hierarchia* (58). See John Carmi Parsons's *Eleanor of Castile: Queen and Society in Thirteenth-Century England* (New York: St. Martin's, 1995), 55, 86, and 58, respectively.

[18] Edward's wife Eleanor of Castile was born in 1241 to King Ferdinand III and the countess Jean of Ponthieu. She, like her husband Edward, already had cross-cultural interests due to her Spanish father and her French mother. Eleanor's father was known as a great warrior king who subdued the Moors and also promulgated the advancement of vernacular literature in Spain. Eleanor's mother Jean accompanied Ferdinand to war against the Moors in Spain, as Eleanor would later accompany her husband Edward almost everywhere except in her periods of confinement (she had over sixteen children). Eleanor was educated by Dominicans and probably had a more "courtly" education than Edward, but we know very little about her early life before she married Prince Edward of England in 1254, when she was only thirteen. Their marriages took place at Las Huelgas in a combination knighting/wedding ceremony officiated by Eleanor's half-brother, King Alphonso X the wise or "el sabio." The circulation of texts from England to Spain probably started in this period. Alphonso was not only a king but also a writer and patron of poetry, and it seems that he too was interested in romance. He was the first king to cite the *Tristan,* which Alphonso perhaps borrowed from his brother-in-law, Edward I. For a more in-depth history of Eleanor of Castile's early life, see J. Carmi Parsons's *Eleanor of Castile,* 1-58.

[19] Cigni, *Il Romanzo,* 18.

[20] Salter, *English,* 82.

[21] Ibid., 88.

French of the romance tales of Arthur, Tristan, and perhaps Alexander.[22] Hence, historian Michael Prestwich concludes that due to the "the scanty surviving evidence, Edward did not have a great enthusiasm for literature."[23] However, I posit the exact opposite: from the above-cited works, there is ample evidence that Edward surrounded himself with people who appreciated romance works and had great enthusiasm for them. Whether Edward himself enjoyed reading romances or having them read to or performed for him is unknown. Since we have few extant works and no library catalogs from this period, we do not know what books Edward owned. Furthermore, with the exception of Rustichello's *Compilation*, we have no evidence that Edward ever commissioned other works of Arthurian literature (or anything else, for that matter). On the other hand, we have ample evidence that Eleanor of Castile read and commissioned a variety of works.[24] Hence, let us assume that Edward's early exposure to Arthurian romance texts was inspired by his family members and also by his own interest in the great martial feats found in romance works; one can imagine a young and impressionable Edward, listening for hours with rapt attention to the tales of the Knights of the Round Table.

---

[22] Salter, *English*, 89.

[23] Prestwich, *Edward I*, 118.

[24] In another romance written by a Frenchman, called the *Escanor*, King Arthur also rarely appears. The *Escanor* is actually two separate stories. The first is about the Knight Kay and his love, named Andrivette. The second part is about Gawain and his enemy Escanor. This work also coincides with Edward's return voyage home from the Crusades. The work is in verse and is by Girart d'Amiens (1274-1282), who dedicated his romance to Eleanor of Castile, Edward's wife. Eleanor possibly commissioned the *Escanor* between 1277-1282 – perhaps in connection with a Round Table held at Kenilworth in 1279 or Warwick in 1282. Historian John Hine Mundy and medievalist Elizabeth Salter both reference this joust, but only Salter mentions the *Escanor* in connection with it (see John Hine Mundy, "Urban Society and Culture: Toulouse and Its Region," in *Renaissance and Renewal in the Twelfth Century*, ed. R. L. Benson et al. (Cambridge, MA: University Press Harvard, 1982), 229-47 and Salter, *English*, 96, respectively).

Eleanor's mother was Joan of Ponthieu. When Joan died (1279), she left Eleanor her estate and lands in France. After Eleanor's accession to the realm of Ponthieu, she probably ordered the *Escanor* to commemorate her forbearers whom, according to Carmi Parsons, she could have "only identified from thirteenth century French chronicles" (Carmi Parsons, *Eleanor*, 55). This interest in chivalric culture and secular history complemented her husband Edward's own chivalric interests and helped "broaden the monarchy's historical focus and unify British traditions of kingship" (Carmi Parsons, *Eleanor*, 56). So, just as Edward utilized the legend of Arthur to lend legitimacy to his reign, so did Eleanor have a legendary ancestor created to bolster her own claims to the region of Ponthieu. For information on Eleanor's reading tastes, her scriptorium and literary patronage, see Carmi Parsons, *Eleanor*, 42-56.

Thus, let us now look into the other major contributor to the forming of Edward's character: his militaristic training and how Edward applied what he read or saw in Arthurian romance to his life in tournaments and battlefields.

BECOMING A KNIGHT: EDWARD I AND TOURNAMENTS

The early education of Edward I was centered on both militaristic training and chivalry. When Edward was sixteen, shortly after his marriage to Eleanor of Castile, he was fitted with weapons and armor and allowed to compete in tournaments. A special tournament without noted Arthurian themes was held for him in Blyth in 1256 or 1258.[25] Although all the knights at this tournament wore padded clothing and carried light weapons, two men were somehow killed, although Edward remained unscathed.[26] After competing in the tourney circuits of England, Edward went to northern France in 1260 with his wife. For the next two years, he tried to become a good knight and to master the lance and sword, but met with little success jousting in France. He lost his horses along with his armor and was wounded at a tournament in June of 1262.[27] Even though Edward was not very successful at tournaments, he did learn a great deal about combat and fighting strategies. Furthermore, in this formative period of his life, he continued to learn how to become a king through martial exploits and probably the reading of Arthurian romances.[28]

Unlike his son, Prince Edward I, King Henry III was not interested in sports or tournaments, and due to his pious nature, he probably considered them sinful. Instead, Henry

---

[25] Prestwich, *Edward I,* 7.
[26] R. Barber and J. Barker, *Tournaments,* 30.
[27] Ibid., 177.
[28] Of all the tournaments recorded in Britain, most were in the lifetime of Edward I (1239-1307), with the exception of two that were held during the reign of his grandson, Edward III. There were tournaments in Britain in 1252, 1259, 1279, 1281, 1284, 1302, 1328, and 1345. See Roger Sherman Loomis, "Arthurian Influence on Sport and Spectacle," in *Arthurian Literature in the Middle Ages: A Collaborative History* (Oxford: Clarendon, 1959), 554.

dedicated his energies to the cult of Edward the Confessor and his building projects in Westminster Abbey. Powicke states that Edward, by contrast, was said to be "prepared to carry the cult of Arthur to the same sort of extremes that his father had accorded to the Confessor's memory."[29] Evidence of Henry's lack of enthusiasm for tournaments is his banning of them in 1232 and 1251.These bans indicate that Henry had no love for jousts, but do not explain his distaste for them.[30] Loomis reports that the Church was especially opposed to tournaments: "popes and prelates thundered against these costly, dangerous, and sometimes licentious frivolities, and [they] denied Christian burial to those who took part."[31] Nonetheless, if a knight died in a tournament, he was usually allowed Christian burial if a letter was sent to the Church.[32] The possibility of burying a dead son who died jousting was probably not much relief to Henry, whose joust-loving son and heir to the throne of England was not particularly successful in tournaments.

Although Henry never explicitly forbade Edward from participating in tournaments, he most likely was not pleased by it. As Prestwich notes, perhaps Henry had a right to be anxious about letting his sons tourney because "tournaments were not at this time the gentlemanly, chivalric jousting competitions of the fifteenth and sixteenth centuries, but could be violent contests, barely distinguishable from battle."[33] But Henry eventually acquiesced to his son's love of tournaments and ceased banning them once Edward was of age. It can also be concluded that since Henry was very religious, his objections to jousting were not only a form of parental anxiety but also fear for the mortal soul of his joust-loving son, Edward.

---

[29] Powicke, *King Henry III*, vol. 2, 515.

[30] Loomis, "Arthurian Influence," 555. Essentially "Round Tables" were festivals held mainly in the Middle Ages that imitated King Arthur's court. At a Round Table there was usually feasting, jousting, dancing, and reenactments of episodes from Arthurian romances.

[31] Ibid., 555.

[32] Barber and Barker, *Tournaments*, 142.

[33] Prestwich, *Edward I*, 60.

Edward had no fears about forfeiting his mortal soul due to his love of jousting. Even before becoming king, he enacted policies to ensure that he could continue attending tournaments and jousts.[34] In fact, Edward, his brother Edmund, and cousin Henry of Almain were all responsible for an edict that permitted tournaments to be held, which repealed Henry's previous prohibitions of tournaments and ensured young men of their right to joust.[35] Although Edward, his brother, and his cousin(s) attended many tournaments in the 1260s, none of these tournaments had explicit Arthurian themes, although Edward was probably still exposed to Arthurian romances through the reading and performances of Arthurian tales during nightly entertainments both at home and abroad. Nonetheless, "Arthur" does not seem to have been of particular importance to Edward until the death of his father (1272), the time he spent with Rustichello in the early 1270s, and his return to England after the Crusades in 1274.

EDWARD AND THE SECOND BARONS' WAR

The early years of Edward and Eleanor's lives were initially spent attending tournaments and quelling the rebellion in the English realm of Gascony. Edward had a fondness for this region and spent a great deal of his youth in southern France.[36] Nonetheless, he was forced to return to England to win back his father's throne from Simon de Montfort and his baronial supporters at the Second Barons' War (1259-67). Initially, Montfort was winning the war and at one point even captured both Henry III and Edward. But Edward escaped, and Simon's fortunes changed for the worse. Simon de Montfort was killed at the Battle of Evesham (1265), and his corpse was horribly mutilated by the Royalists. Edward then proceeded to help his brother

[34] Edward became king in 1274.
[35] Prestwich, *Edward I*, 60.
[36] By the time Edward became King, the only English holdings in France were Gascony and Poitou. At its fullest extent, the Angevin Empire consisted of most of western France: Normandy, Maine, Touraine, Brittany, Anjou, Poitou, Limousine, Saintonge, Périgord, Quercy, Gascony, and the Agenais. See M.G.A. Vale, *The Origins of the Hundred Years War: The Angevin Legacy, 1250-1340* (Oxford: Clarendon, 1996), 11.

Edmund at the Siege of Kenilworth (1266) against the remaining rebel forces of Simon de Montfort's son, (also named Simon) versus the Royalist forces of King Henry, Edward, and Edmund. The castle at Kenilworth was impenetrable, but cold and hunger eventually overcame the rebels, and the Dictum of Kenilworth was finally agreed upon in December of 1266. Although there were mass confiscations of the lands and fines issued to those who had sided with the Montforts, Thomas Wykes writes of Edward's "mercy" toward his former enemies.[37] Edward was wise to be merciful to the barons because he needed their support (especially financially) for his crusade—and, in a sense, Edward was once again "saving" his father because it was Henry who initially vowed to go to the Holy Land in the first place.

EDWARD, THE CRUSADES, AND LITERATURE DURING THE CRUSADES

After the quelling of the Barons' War, Edward could now concentrate on his preparations for his crusade and how to finance this expedition. Edward swore along with his brother Edmund and cousin Henry of Almain to go on crusade in May of 1268, but they did not leave England until the summer of 1270. It was a dubious time to go abroad, since the English realm was still unsteady after the costly war against the barons, and there were no funds to support a crusade; in short, Edward and the Crown were broke. Edward had to borrow heavily from King Louis IX of France and also from Italian bankers to fund his crusade.[38] Norman Housley, an expert in the history of the Crusades, rather cynically states that the "Crusades

[37] Prestwich, *Edward I*, 57.

[38] English monarchs banking heavily with Italians started in the reign of Edward I. For roughly three-quarters of a century (1270-1340) the English crown relied heavily on a succession of major financiers: the Riccardi (Lucca) to 1294; the Frescobaldi (Florence), 1299-1311; Antonio Pessagno (Genoa), 1312-20; the Bardi later in a combination with the Peruzzi (Florence), 1312-1341.The initial attraction bringing the Italians to England was the wool trade, along with the opportunities of involvement in papal high finance, and it was likewise trade that enabled the king to employ them as financiers. For Italian and English trade relations, see Richard W. Kaeuper, *War, Justice, and Public Order. England and France in the Later Middle Ages* (Oxford: Clarendon Press, 1988), 43-44.

[were] motivated at least in part by Edward's desire to tax the English church."[39] However, since Edward was to become an authority on the Crusades, it seems that the Church did not protest when their taxes were being withheld to fund Edward's pious endeavor. Hence with monies, from King Louis, Italian bankers, and Church coffers, Edward was finally ready to depart for the Crusades in August of 1270. It was during this period of his life that Edward began his own Arthurian adventure in his literary sponsorship of Rustichello da Pisa.

Edward was supposed to rendezvous with King Louis IX of France at Aigues-Mortes, but when Edward finally arrived, he found that Louis had already left for Tunis. King Louis had diverted his troops to Tunis on the request of his brother, Charles of Anjou who wanted to defeat the emir of Tunis. Charles wanted to fight the emir because he was supporting the Hohenstaufen cause, which disputed Charles's rule over the Kingdom of Sicily.[40] Louis wanted to support his brother Charles and his claim to Sicily because he was a staunch supporter of the Church and was thus opposed to the imperialistic claims of the Hohenstaufen. Unfortunately, shortly after Louis' arrival in Tunis, an epidemic struck Louis and his men.[41] Louis died, his son Philip III was gravely ill, and most of the French soldiers had disbanded before Edward arrived in Tunis. To Edward's chagrin, a treaty had already been made between the French and the emir a week before he arrived. Nonetheless, Edward's zeal for a crusade was undiminished, and he decided to continue to the Holy Land and free the city of Acre. Unfortunately for Edward, winter had come,

---

[39] See Norman Housley, *The Italian Crusades: The Papal-Angevin Alliance and the Crusades Against Christian Lay Powers, 1254-1343* (Oxford: Clarendon Press, 1982), 88.

[40] Prestwich, *Edward I*, 73.

[41] This epidemic was probably dysentery or typhus. For more information on this illness during King Louis' Crusade, see Jonathan S.C. Riley-Smith, *The Crusades: A History* (New Haven: Yale University Press, 2005), 210-211.

and it was not a good time to embark on a crusade; Edward therefore accepted an invitation from his Uncle Charles of Anjou to winter in Sicily.[42]

Edward's lust for crusading was probably a combination of genuine religious devotion, a sense of adventure, and the dream of war booty to refill England's depleted treasury. As cultural historian Johan Huizinga points out, "next to religion, chivalry was the strongest of the ideas that filled the minds and hearts of those men of another age," and chivalry was at its most influential in the late Middle Ages.[43] Although we cannot gauge exactly how religious Edward was due to his previous participation in tournaments and his martial experiences during the Second Barons' War, it is apparent that chivalry was becoming important to him at this time in his life. Perhaps Edward's interest in chivalric culture and martial arts was further fueled by the literary works written for him and his wife while on crusade. In fact, almost all literary works concerning Edward and Eleanor were started during the Crusade.[44]

The first of these works was a copy of Vegetius' *De re militari* in Anglo-Norman requested by Queen Eleanor.[45] This book was presented to Edward as a Christmas gift from Eleanor when the royal couple was wintering in Sicily at the court of Charles of Anjou before they could continue to the Holy Land (1271).[46] Medieval historian Christopher Allmand states that "the translation was intended to instruct the prince in the finer aspects of war which had

---

[42] Prestwich, *Edward I*, 74. This was not just a noble extending a courteous invitation. Charles of Anjou was Edward's uncle by marriage. In 1246 he married Beatrice of Provence, the younger sister of Edward's mother Eleanor of Provence. Although Beatrice died in 1267 and Charles had already been remarried to Margaret of Burgundy in 1268, Edward was still considered family.

[43] In Johan Huizinga, James S. Holmes, and Hans Van Marle, *Men and Ideas: History, the Middle Ages, and the Renaissance: Essays* (New York: Meridian, 1959), 197.

[44] See fn. 24 of this chapter for a discussion of the *Escanor*.

[45] For Eleanor's commission see Prestwich, *Edward I*, 123. Interestingly, Christopher Allmand points out that no English king other than Edward I and Edward III is known to have owned a copy of Vegetius. See C. Allmand, *The De Re Militari of Vegetius: The Reception, Transmission and Legacy of a Roman Text in the Middle Ages* (Cambridge, UK: Cambridge University Press, 2011), 71.

[46] See Fligelman Levy, "Livre de Meliadus", lxxvii.

brought the Romans such success."[47] Edward probably anticipated a new kind of warfare in unfamiliar conditions and wanted to learn as many war strategies as possible. Edward's *De re militari* was written by one Master Richard, who was probably in Edward's crusading retinue and was also perhaps Eleanor's clerk.[48] Eleanor probably intended this historic military manual to teach her husband some useful strategies before embarking to Acre, since Edward's military skill was a major element of his reputation.

Edward seemed keen to study the strategies laid out in Vegetius, and nothing could deter him from going on crusade, not even tragedy.[49] In Sicily, just before embarking for the Holy Land, Edward received a letter that his father was gravely ill and near death (February 1271). Nonetheless, the illness and impending death of his father did not deter Edward from the crusade. Instead, he sent his cousin Henry of Almain back to England to tend to the "affairs of state," and presumably check on his father. [50] However, when Henry stopped to hear Mass at the Church of San Silvestro in Viterbo, he was killed by Simon de Montfort the younger and his brother Guy de Montfort. Soon after this, Edward received another missive informing him of the murder of his cousin Henry by the Montforts (March 1271).[51] But despite these sad tidings, Edward was still undeterred and continued with his preparations for the crusade in Acre.

---

[47] Allmand, *De Re Militari,* 152-153.

[48] No one knows who precisely "Master Richard" was. Elizabeth Salter also mentions that "Master Richard" has been identified as the personal physician of Edward, and he was the same "Maistre Richard d'Irlande" who wrote the *Prophécies de Merlin,* probably at Emperor Fredrick II of Sicily's court. Nonetheless, Salter concedes that since neither theory can be "proved" nor "disproved", they should "probably be resisted" (E. Salter, *English,* 98).

[49] Carmi Parsons, *Eleanor,* 30 and Allmand, *De Re Militari,* 150 both write of Edward's using the *De Re Militari* for instructive purposes.

[50] Prestwich, *Edward I,* 74.

[51] Catalina Girbea notes that Branor le Brun's black-and-white arms could be propaganda for the Montfort family, who also used these same colors in their armory, although I personally fail to see the connection. See C. Girbea, "Flatteries héraldiques, propagande politique et armoiries symboliques dans quelques romans arthuriens." ed. Denise Turrel et al. (Rennes: Presses Universitaires de Rennes, 2008), 365-80.

Edward first sailed to Trapani, then Cyprus, and then on to Acre where he arrived in May of 1271.[52] However, the extreme heat and exhausting sea voyage took a significant toll on Edward's men and horses, which inevitably slowed the progress of his crusade.[53] Had Edward not arrived when he did, Acre would have fallen to the Mamluk troops of Baibars, the Sultan of Egypt, who had already taken the fortresses of Chastel Blanc, Gibelacar, and Crac des Chevaliers.[54] Edward's military strategy is unknown because he did not bring enough men or supplies for an extended siege. Perhaps realizing the need for help, Edward wrote the Mongol leader Abagha Ilkhan and asked him to join forces with him against the Mamluks in a coordinated campaign. However, this joint Mongol-English campaign never happened, and Edward only attempted some minor raids and skirmishes with the Moslem forces. These micro-battles were neither profitable nor successful in quelling the overwhelming forces of the Saracens.[55] Most critics like historian Aziz Atiya sum up Edward's crusading efforts in 1271-1272 as "short-lived and ineffective," which Edward himself must have also realized.[56] Perhaps the most exciting event to have happened to Edward in the Holy Land was an unsuccessful assassination attempt ordered by Baibars in 1272. Four months after that attempt on his life, Edward decided to leave the Middle East forever and sailed for Italy.

---

[52] Prestwich, *Edward I*, 74.
[53] Ibid., 75.
[54] Ibid.
[55] Ibid., 76-77.
[56] See Aziz S, Atiya, *Crusade, Commerce and Culture* (Bloomington: Indiana University Press, 1962), 91, and Michel Aubrun et al., "Le Moyen Âge dans les paysages ruraux auvergnats," in *Actes des congrès de la Société des historiens médiévistes de l'enseignement supérieur public. 10e congrès in Lille* (Paris: Publication of the Sorbonne, 1979), 221-232.

EDWARD I AND RUSTICHELLO DA PISA

When Edward was in Italy in the early 1270s, Rustichello's hometown of Pisa was facing constant infighting between the powerful Visconti and della Gherardesca families.[57] Charles of Anjou, the King of Sicily and Edward's uncle, hosted Edward on his voyage to and from the Crusades. Charles also helped Ugolino della Gherardesca attack Ugolino's native city of Pisa and restored the minority Guelph faction to power in 1274.[58] Although Edward was not directly involved with politics in Pisa, he seems to have had dealings with Charles of Anjou and Rustichello.

The "literary" figures from Pisa in the late thirteenth century were usually notaries or clerics. As already mentioned, Pisa in the 1270s was going through a period of great unrest; in addition to the internal conflicts in the city due to the warring families of the della Gherardesca and the Visconti, there were also outside threats such as Charles of Anjou, who was trying to get a foothold in Tuscany.[59] Because of the internal and external problems in Pisa, partly generated by Charles of Anjou, there was a flurry of Pisans from both the Ghibelline and Guelph factions going back and forth between the Pisan municipality and the Sicilian court of Charles. These functionaries were needed to establish peace treaties and trade negotiations with the French count. Perhaps a Pisan notary—for argument's sake, let's call him "Rustichello da Pisa"—met or saw Prince or King Edward while acting as a functionary for Pisa in Sicily. Perhaps Rustichello

---

[57] The fighting between these two families was mainly due to their respective holdings in Sardinia. Up until the end of the thirteenth century, the Pisans controlled the eastern half and southern tip of Sardinia, while the Genovese controlled the northwest corner of the island. The center and western side of the island were independent of "foreign" rule; see Francesco Cesare Casula, *La storia di Sardegna* (Sassari: Carlo Delfino Editore, 1994), 291-304.

[58] For Charles of Anjou's relationship with Pisa, see Jean Dunbabin, *Charles I of Anjou: Power, Kingship and State-making in Thirteenth-century Europe* (London: Longman, 1998), 81-88.

[59] Stefano Carrai, "Aspetti della letteratura Toscana nei secoli XIII e XIV," in *Etruria, Tuscia, Toscana. L'identità di una regione attraverso i secoli, II (secoli V-XIV). Atti della seconda Tavola Rotonda (Pisa, 18-19 marzo 1994),* ed. G. Garzella (Pisa: Pacini, 1998), 134.

even got close to the English monarch and was allowed access to his private library or that of Charles of Anjou. Here Rustichello could read the romance classics such as the works of Chrétien de Troyes, the *Tristan en prose, Lancelot en prose,* the *Guiron le Courtois,* and perhaps even some Celtic myths; these tales may have inspired Rustichello to write his Arthurian romance.[60] Another possibility is that Eleanor or Edward lent Rustichello a very large volume of romances and asked him to create a new work or at least a new character (Branor le Brun) that embodied the essence of Edward, at least superficially. That is to say, it represented the great size of Edward Plantagenet and also his alleged reputation as a formidable knight and jouster, although this summation was much conflated by the Midi poets, as will soon be evident.

It is also possible that the resulting *Compilation* in prose was compiled from works found in the "magnum librum" of romance of Edward's father, Henry III. Edward could have borrowed his father's book when he went on crusade, and since Edward and his retinue would have had months of travel to reach the East and needed to entertain themselves in the evenings, it is a distinct possibility that they took books with them on their voyage. If Rustichello is to be believed, Edward took these books with him when he traveled to the Holy Land. As Rustichello indicates in his introduction:

> *Et sachiez tot voirement que cestui romainz fu treslaités dou livre monseigneur Odoard, li roi d'Engleterre, a celui tenz qu'il passé houtre la mer en servise Sire Damedeu pour conquister le saint Sepoucre. Et maistre Rusticiaus de Pise, li quelz est imaginés desovre, compilé ceste romainz, car il en treslaité toutes les tremervillieuse novelles qu'il truevé*

[60] Of note, knights of considerable standing and also kings were very familiar with Arthurian romance and especially the Prose Lancelot as aptly demonstrated by Elspeth Kennedy in her 'The Knight as Reader of Arthurian Romance' in *Culture and the King. The Social Implications of the Arthurian Legend. Essays in Honor of Valerie Lagorio*, ed. Martin B. Schichtman et al., SUNY Series in Medieval Studies (Albany: State University of New York Press, 1994), 54-90.

en celui livre et totes les greingneur aventures; et traitera tot sonmeemant de toutes les granz aventures dou monde.

(And know in truth that this romance was translated from the book of my Lord Edward, King of England, at the time that he was going over the sea in the service of Our Lord God to conquer the Holy Sepulcher. And Master Rustichello da Pisa, who is pictured here above, compiled this romance, for he translated all the wondrous stories and the most extraordinary adventures that he found in that book; and he will speak very succinctly of all the great adventures of the world.)[61]

Rustichello mentions three things specifically about Edward: firstly, that Edward is already a "King" (*monseigneur Odoard, li roi d'Engleterre*); secondly, that Edward went on crusade to the Holy Land in the service of God (*qu'il passé houtre la mer en servise Sire Damedeu pour conquister le saint Sepoucre*); and thirdly, that Rustichello had the opportunity to borrow Edward's books to compile his romance (*compilé ceste romainz, car il en treslaité toutes les tremervillieuse novelles qu'il truevé en celui livre*). All of these will play important roles in the following discussion of the Rustichello-Edward connection as evidenced in the *Compilation.*

After Rustichello's brief introduction, he proceeds to tell the story of Branor le Brun. Branor is a character who until proven otherwise is an original creation of Rustichello.[62] When the initial episodes of Branor jousting at Camelot are over, Rustichello then explains why he

[61] *Il Romanzo,* 1:2-3.

[62] Again, briefly stated, Branor le Brun is over 120 years old, a gigantic, tall, and pious knight. He previously fought with Arthur's father Uther Pendragon, but has been in retirement for a long time; moreover, he has not borne arms for at least forty years. He comes to Camelot to joust with the Knights of the Round Table and proceeds to best them all. Branor then starts his homeward journey toward Northumberland and saves many damsels and imperiled knights along the way. Once reaching his home, Branor writes a letter to King Arthur revealing who he is and his state. He then dies within the year, and King Arthur has his adventures recorded by his scribes.

placed them at the beginning of his work, once again mentioning Edward I. Rustichello states that he put the Branor episodes first because "the master found them [written so] in the book of the King of England" (*li maistre le truevé escrit eu livre dou roi d'Engleterre*).[63] This is obviously not a very thorough explanation, but it gives Rustichello the opportunity to once again mention Edward by name and places himself directly in the King's company, since Rustichello could "borrow" his books.

After the death of King Louis of France (1270), Edward was by far the most famous monarch in Europe and certainly one of the few with actual crusading experience. However, where Louis was to be remembered for his sanctity and piety, it seems Edward wanted to be remembered for his martial prowess and connections to the legendary King Arthur.[64] Whether or not Edward intentionally sought to forge his kingship through the figurehead of Arthur is speculation. On the other hand, what is not speculative is that in the story of Branor his great size and skill with the lance would have reminded contemporary readers of Edward without Rustichello's actually naming Branor after the King of England. Moreover, if Edward did play the role of patron to Rustichello, then the *Compilation* would certainly have more weight if it were inspired by books of romance and perhaps Celtic myths found in the collection of the world-renowned crusader, King Edward.[65] Lastly, what is not speculative is that Rustichello was the first author to make a tangible link between Edward and Arthurian lore through the character

---

[63] *Il Romanzo,* 16:19.

[64] King Louis of France became Saint Louis in 1297 which was less than 40 years after his death in 1270. Edward I was alive when Louis was canonized and probably witnessed firsthand how Louis' cult was used to advance different political agendas and establish the legitimacy of the Capetians. See M. Cecilia Gaposchkin, *The Making of Saint Louis: Kingship, Sanctity, and Crusade in the Later Middle Ages* (Ithaca: Cornell University Press, 2008), 1-67.

[65] Since Rustichello already refers to Edward as "king," it is assumed that Rustichello wrote his *Compilation* sometime after 1273 since Edward's father Henry III died in November of 1272, and Edward did not return to England from the Crusades to be officially crowned until 1274.

of Branor, and both he and Edward were considered the "flower of chivalry," as will soon be discussed.

THE LANCE AND THE QUINTAIN

What inspired Rustichello to write the character of Branor le Brun? Roger Sherman Loomis is the only scholar who has ventured a guess on the origins of the character. Loomis surmises that Branor was inspired by the Celtic legend of Brân the Blessed, which is found in the *Mabinogi.*[66] It could be that these myths were in the collection of Edward, or that Rustichello heard a version of them from someone in the retinue of the King of England when he was in Italy. Neither of these suppositions has been proven, and there is no known copy of the *Mabinogi* or mention of it in Italy in this time period. Furthermore, aside from the fact that both Branor and Brân the Blessed were giant-like men and the similarity in their names, I see no other connections between these two legendary warriors. There are many more connections between Rustichello's Branor and King Edward, as we shall see in the comparison that follows.

As already mentioned, Edward's early training was primarily based on going to tourneys and running at the quintain or jousting dummy.[67] As part of his early training as a knight and to prepare for future warfare, Edward had to master the sword and lance. He did this by attending many tournaments and spending many hours at the quintain.[68] In the initial scenes of the *Compilation,* when Branor jousts or rather, does *not* actively joust with the Knights of the Round

---

[66] For Loomis's complete explanation as to why he sees the character of Branor le Brun in the mythological giant Brân the Blessed, see R. S. Loomis, *Celtic Myth,* 305-307. Furthermore, there is a discussion of the origins of Branor in fn. 77 in Appendix 1 of this dissertation (translation of the Branor le Brun episodes).

[67] The quintain was "a dummy used for jousting practice: originally it consisted simply of a shield set up on a post, but later was mechanized with an arm designed to fell the charging horseman if he did not land his blow properly." Kibler's glossary in Chrétien De Troyes, *Chrétien de Troyes Arthurian Romances,* trans. William W. Kibler (London: Penguin, 1991), 503.

[68] Again, Edward received his arms at the age of sixteen (Prestwich, *Edward I,* 7).

Table, he often assumes the pseudo-passive role of "quintain" against his competitors. I say "pseudo-passive" in that Branor remains quintain for all his jousts, yet no one can unhorse him, and he never loses. Since the quintain was used to practice how to become a better knight, it seems that Branor wants to test the younger generation of knights—i.e., the Round Table Knights. He does this by testing their mettle and preparation with him sitting quintain. This way, Branor can then assess whether his generation of Old Table Knights is superior to the New or Round Table Knights. Branor tells Palamedes, the first knight to joust with him at Camelot, "I order you to take your distance from me and come strike me with all your might: I will be your quintain" (*voz esloingnes de moi et me venes ferir de toute votre force et je vos serai quintaine*).[69] Although a bit imperious when "ordering" Palamedes to distance himself from him, Branor does not want Palamedes to hold back when he hits him and promises he will remain stationary. After Branor defeats Palamedes, he makes the same offer to his next opponent, Gawain. Branor says to Gawain: "Sire Gawain, everyone says that you are a valorous knight, but I tell you that since I am a such a knight that I will not take up the lance for you, and I will be the quintain just as I did with Lord Palamedes" (*vos di que je sui tel chevalier que je ne prendrai lanse par voz ainz vos serai quintaine ausi con je fiz a mesire Palamides*).[70] Again, Branor takes a pseudo-passive role because he seems like a fool, sitting still while a young and strong knight pounds him into the dust, yet he is never unhorsed. Branor takes each blow without budging an inch and remains in his quintain position by sheer prowess. He uses no magic or trickery and establishes himself as the best knight in the world. Holding the long, heavy pole of a lance steady while galloping toward Branor is in itself a feat of strength and skill. However, sitting still and letting his opponents strike him at full gallop is an even greater test of Branor's fortitude and

[69] *Il Romanzo,* 5:3.
[70] Ibid., 5:21.

courage, because even when he seems to be in a passive role, he is the aggressor and always the victor.

All of the Branor episodes end in the same manner: Branor assumes the position of quintain, he asks the name of his opponent, he refuses to give his own name, he wins the joust or fight (usually with a lance), and then he moves on to the next joust, fight, battle, or melee. To summarize the somewhat repetitive nature of Branor's jousting at Camelot, the narrator states that "[A]ll twelve of these knights went to strike the knight [Branor le Brun] one after the other, and with all [of these] he was quintain" ([T]*uit cist chevaliers, que doçe furent, alent tuit les uns aprés les autres a ferir sor li chevalier, et a toz fu li chevalier quintaine*).[71] Again, Branor is so strong and brave that no one can unhorse him. He is the epitome of what all knights want to be. In fact, almost all of Branor's fights and jousts are with the lance rather than with the sword. This connection is necessary because Edward was known (especially in Provençal poetry) as the "best lance in the world."[72]

The "best lance in the world" is a phrase used to describe Edward I from the Provençal *sirventés, "Totz lo mons es vestitiz et abrazatzde falsetat"* ("The whole world is clothed and surrounded by falsehood"), a poem written by the troubadour Peire Cardenal in the early 1270s. In this work, Cardenal tries to convince King Louis' son Philip III to redeem his father's unsuccessful crusade by accompanying the valiant Prince Edward of England to the Holy Land.[73] As already noted, in early 1270 Edward was planning his crusade, but had very few men and funds to carry it out. The lines from the poem that regard Edward are as follows:

---

[71] *Il Romanzo,* 6:8.

[72] Powicke, *King Henry III*, vol. 2, 515.

[73] It is understandable why Philip III did not want to go on crusade. In his brief experience in Tunis, Philip contracted typhus or dysentery. This disease killed his father, Louis IX, although Philip III survived. See Prestwich, *Edward I*, 75 and fn. 41 of this chapter.

A trastotz prec que pregon coralmen

Dieu Jhesu Crist que don lai alegransa

A N'Audoard, quar es la meilher lansa

De tot lo mon, e don cor e talen

Al rei Phelipp que-l secorra breumen.

(I ask all to pray sincerely / to God, Jesus Christ, that he may grant joy / to Lord Edward over there [in the Holy Land], as he is the best lance / in the whole world, and grant to King Philip the heart and desire to assist him soon.)[74]

When Cardenal mentions both the Holy Land and Edward in the line "I ask all to pray sincerely / to God, Jesus Christ, that he may grant joy / to Lord Edward over there [in the Holy Land]" (*A trastotz prec que pregon coralmen / Dieu Jhesu Crist, que don lai alegransa /A N'Audoard*), he seems to set a precedent for linking Edward to the Crusades and the Holy Land. Although much of the poetry from this crusading time period demonstrates a devotion to the Holy Sepulcher, to my knowledge Cardenal is the first to link Edward to the Crusades in the Middle East.[75]

Rustichello places both God and Edward in the prologue to the *Compilation*. But where Cardenal links Edward's name to being "the best lance in the whole world" (*quar es la meilher lansa / De tot lo mon*) in the sixth stanza of his *sirventés*, Rustichello does not. Instead, Rustichello immediately starts his episodes of Branor after the prologue, and links Edward to his Crusade and the Holy Sepulcher. Furthermore, although Edward was known as "the best lance in

[74] This is stanza VI of the poem. The entire version in Provençal with modern French translation can be found at: http://www.cardenal.org/section4.html

[75] For many other references to Edward's prowess arms and his role as the crusading knight, see C. Fabre's "Un sirventés," 217-47.

the world," this was probably just a bit of royal propaganda because as we saw previously, Edward was not invincible on the jousting field. Edward's reputed fame with the lance certainly influenced Rustichello's character of Branor. However, where Edward was thought to be the best with the lance, Branor actually demonstrates that he is the best with the lance. Nonetheless, the popular sentiment of Cardenal's poem was not effective with Philip III because he never went on crusade with Edward.[76] Moreover, despite the outcome of Edward's crusade or his dubious lancing abilities, he was still considered the "idol of the poets of his time" (*l'idole des poètes de son époque*), and it seems he was the idol of Italian romance writers as well.[77]

THE QUASI-GIANTS: BRANOR LE BRUN AND EDWARD I

Besides his supposed preeminence with the lance, another similarity that Edward I shares with Rustichello's Branor is his sheer size. Edward I was a very large man for his time and was nicknamed "Longshanks" due to his great height. Edward's height was especially notable in the medieval period; he stood around 6'2 when the average height for a man was around 5'7.[78] Likewise, the character Branor le Brun is a very large man. Rustichello almost compares him to a giant: "He was so tall and had such an imposing frame know then that he was almost a giant" (*mout grant de son cors que sachiez qu'il estoit si corsus que pou ne faut qu'il n'estoit jeant*).[79] He is freakishly tall compared to the other knights, but since there was a negative connotation in

[76] Historian Palmer Throop believes that there is "ample confirmation that those using the vernacular were reflecting popular discontent," and since many of the *sirventés* were set to popular music, these poems probably had large audiences that spanned all classes of society. Throop also discusses the language in this poem. Interestingly, Rustichello da Pisa also chose to write in a vernacular language. See P.A. Throop, "Criticism of Papal Crusade Policy in Old French and Provencal," *Speculum* 13.4 (1938): 403.

[77] C. Fabre, "Un sirventés," 237.

[78] Measurements of the body of Edward I were taken in 1774 and reported by Joseph Ayloffe in his article "An Account of the Body of King Edward the First: As It Appeared on Opening His Tomb in the Year 1774." Sir Joseph Ayloffe, *An Account of the Body of King Edward the First, as it Appeared on Opening His Tomb in the Year 1774.* By Sir Joseph Ayloffe. Read at the Society of Antiquaries, May 12, 1774. [London], 1775. Eighteenth Century Collections Online. Gale. University of Texas at Austin. 18 Feb. 2016. FACSIMILE.

[79] *Il Romanzo,* 3:5.

the Middle Ages with giants, Rustichello avoids ever specifically calling Branor a "giant."[80] Probably the most insightful comment (or at least a basis for comparison) on Branor's size is given by the evil knight Karacados when he is fighting Branor. Karacados is himself a quasi-giant and very strong, but he is nothing compared to Branor. Rustichello tells us that "you must know that Karacados was so tall and so massive that he was very nearly a giant" (*est bien ausi grant et ausi corsus que pou s'en faut qu'il n'estoit jeant*).[81] Yet Karacados is equally astounded by Branor's size. While jousting, Karacados muses about Branor:

> *Et Karacados se fait grant mervoille qu'il puet estre; il dit bien a soi meïsmes que cestui estoit bien le meillor chevalier, et le plus poissant a cu'il se conbatisse dou primier jor qu'il porté armes primierement, et, 'se Dex me saut, c'il ne fust si grant et si corsut je quideroie que ce fust m. Lancelot dou Lac ou m. Tristan de Leonois, mes ce ne puet estre, car je voi qu'il est plain pié greingnor que nul d'eaus. Mais je puis bien dire seüremant que selonc qu'il est granz, est il de valors.*
>
> (And Karacados was greatly astounded at it, and told himself that in truth he [Branor le Brun] was the best knight in the world, and the strongest knight he had ever fought since the first day he took up arms, and, "so help me God," said he, "if he wasn't so tall and robust, I would think that he was Lord Lancelot du Lac or Lord Tristan of Leonois; but

---

[80] For examples of the medieval negative connotation of giants one need look no further than the *Divine Comedy* by Dante Alighieri. In this work all giants are found in hell. Dante's giants are considered stupid, prideful, and blasphemous. As Walter Stephens states of the giants in the *Inferno*; "their pride in their physical prowess, and their illusions of self-sufficiency caused their stupidity (*insipientia* or *sciocchezza*), or what Virgil also calls *mal coto* (*Inf.* 31.77)." Nimrod, Ephialtes, Briareus, and Antaeus all tried to compete with their God(s), and all were defeated by their gods. According to Stephens, this echoes Flavius Josephus's notion that the biblical giants resembled those of Greek myth because they "despised God owing to their pride in their strength."[80] Although Dante's giants are not necessarily stupid, they have an ignorant arrogance that stems from their pride in their physical strength. This misplayed pride makes the giants err and eventually fall. See Walter Stephens, *Giants in Those Days: Folklore, Ancient History, and Nationalism* (Lincoln: University of Nebraska, 1989), 69.

[81] *Il Romanzo*, 32:14.

that is not possible, because I see that he is a full foot taller than either of them. But I can say with certainly that he is as valorous as he is tall.”)[82]

The last part of this speech, in which he states that Branor is larger than both Tristan and Lancelot, is of interest because Edward I was also esteemed for his great size. Moreover, if Branor’s valor (at least for Karacados) is gauged by his height, he must also be, according to Karacados, a better knight than both Tristan and Lancelot. Edward, like Branor le Brun and Karacados, was also “so tall that in a common crowd he stood head and shoulders above the rest.”[83] Hence, Edward by extension must also be a more formidable knight than all the others because he is so large.

There is yet another comparison of Branor to Lancelot and Tristan, when Branor is battling with a sword instead of a lance against the evil Count Guiot. The narrator opines that Branor demonstrates the greatest skill in arms in all of history:

Et ce ne est pas mervoille, car sanz faille li Viel Chevalier mo[n]tre en celle mellee si grant mervoilles d’armes que la stoire nos tesmoingne; car se m. Lancelot ou m. Tristan ou m. Palimédes, ou cinquant des meillor chevalier de la Table Reonde fussent a celui point avec les homes dou quens, si ne avront peü souffrir le grant pooir dou Viel Chevalier.

(“And this is no wonder, because the Old Knight, without a doubt, continued to demonstrate in that battle the greatest feat of arms that history has handed down to us; that if Lord Lancelot du Lac, or Lord Tristan, or Lord Palamedes, or fifty of the best

[82] *Il Romanzo*, 32:18-20.
[83] Powicke, *King Henry III*, vol. 2, 686.

Knights of the Round Table found themselves at that moment on the Count's side, they would not have been able to withstand the great strength of the Old Knight.")[84]

Because of his great size and strength, Branor—and, by extension, Edward—were able to complete the "greatest feat of arms," and were both unparalleled even by the great Tristan, Lancelot, Palamedes, or fifty of the best knights of the Round Table. Their "feats of arms" place Branor and Edward on a plain superior to all King Arthur's knights because they are greater, stronger, and bigger than all the other knights.

PURITY, PIETY, AND POETRY

Another aspect of character that Branor le Brun shares with Edward I is religious devotion and piety. The damsels that Branor saves often ask him to have "pity" on them and to save them from whatever danger they find themselves in. Furthermore, in his episodes Branor is frequently at Mass praying, or is in some way invoking God or the Madonna to aid him and grant him victory over his enemies. Edward, like Branor, was also a strong and "pious" knight. However, Edward showed his devotion through martial acts, i.e., going on crusade, rather than through cathedral-building and works of art, as Henry III had. Also, Branor was considered a good and pious man not only for his frequenting of Mass, but also because his feats of arms were considered otherworldly since no other mortal man could have accomplished them. Although Edward was probably motivated to go on crusade "in part by a sense of adventure," he was also "driven to fulfill his crusading vow by a sense of conventional piety."[85] Lastly, the Old Knight Branor le Brun was an object of veneration and awe because of his feats on the battlefield.

---

[84] *Il Romanzo*, 23:20.
[85] Raban, *England*, 169.

Rustichello writes that the people of Listinois "honored the Old Knight as much as if they were honoring a sacred relic" (*font si grant henor au Viel Chevalier con c'il fust un cors saint*).[86] Similarly, Edward was venerated and considered extremely pious because he went on crusade, as evidenced by two death dirges written for him after 1307.

Edward's legacy as the best knight of his time is reflected in two laudatory elegies or laments written after his death. The language and terms used in these funerary poems commemorating King Edward are quite similar to those used to describe the character of Branor in Rustichello's *Compilation*, thus yielding another connection between the real-life King and the fictional Arthurian character. The *Lament of the Death of Edward I* is an Anglo-Norman panegyric or eulogy on Edward's virtues, achievements, appearance, and character. This poem is thought to be by John of London[87] and was written before the second poem to be discussed, the *Elegy on the Death of Edward I* in Middle English. These poems are slightly different from one another, but the *Lamentation* clearly inspired the *Elegy* for Edward, and it is apparent that Edward was greatly mourned by his nobles, the clergy, and commoners alike.

In the *Elegy* Edward, like Branor, is praised for his strength. He is "a knight so strong" (*a knyht that wes so strong)*, and the "flower of all chivalry" (*the flour of al chivalerie*).[88] Actually, in both the French and English elegies for Edward, he is called the "flower of chivalry" (*la flour de ta chivalerie*), which is often a symbol of purity or piety. Early in his reign, Wykes praised Edward as "the flower of the army," "of leonine courage" and "ignorant of fear," as is the

---

[86] *Il Romanzo,* 23:26.

[87] John of London was also known as John Bever, and was a chronicler and monk at Westminster in the late thirteenth and early fourteenth centuries. See Charles Lethbridge Kingsford, "John of London (d. 1311)," *Dictionary of National Biography 1885-1901,* vol. 29 (London: Smith & Elder, 1901), 449.

[88] For "*a knyht that wes so strong,"* see "Elegy,"Appendix 4, pg. 284 of this dissertation. For "*the flour of al chivalerie"* or "*la flour de ta chivalerie*," see the "Elegy," Appendix 4, 288 and "Lament," pg. 291, respectively.

character Branor le Brun.[89] Edward and Branor were the best knights in all of Christendom and were recognized as such. Because Edward was the best, Rustichello made it a point to mention Edward's participation in the Crusades in his introduction to the *Compilation*, and then continue with the tale of Branor.

Edward follows God's will by going on the Eighth Crusade to secure the Holy Sepulcher.[90] In the *Elegy*, the poet states: "Of whom God has done his will / and in war he was wise / to go to the Holy Land, to win us heaven's rich bliss" (*Of wham God hath don ys will / Ant in war werre war ant whys / To wenden into the Holy Londe, To wynnen us heve (n) riche blisse*).[91] Similarly, in his prologue Rustichello specifically mentions that Edward is following God's will by going on crusade; Edward "goes over the sea in the service of God, our Savior in order to conquer the Holy Sepulture" (*monseigneur Odoard, li roi d'Engleterre, a celui tenz qu'il passé houtre la mer en servise Sire Damedeu pour conquister le saint Sepoucre)*.[92] However, the most striking connection between Branor and Edward I is found in the *Lament for Edward I.* Here Edward is called a "*viel chanu,"* or old and hoary man, which perfectly parallels the figure of Branor. Perhaps not only Edward I himself inspired the poet to write about Edward in similar terms, but also Rustichello's character of Branor le Brun.[93]

---

[89] See N. Denholm-Young, *Collected Papers of Noel Denholm-Young* (Cardiff: University of Wales Press, 1969), 173.

[90] In John Scattergood's analysis of these poems he reads them as strictly political and tries to discover the site of 'resistance' from where they originate. See J. Scattergood, "Authority and Resistance: The Political Verse," in *Studies in the Harley Manuscript: The Scribes, Contents, and Social Contexts of British Library MS Harley 2253*, ed. Susanna Fein (Kalamazoo: Western Michigan University, Medieval Institute Publications, 2000), 163-217.

[91] For reference to the Holy Land in the poems see "Elegy," Appendix 4, pg. 286 and the "Lament," Appendix 5, pg. 294. Lastly, for reference to the Holy Land in the *Compilation*, see *Il Romanzo*, 1:2.

[92] *Il Romanzo*, 1:1.

[93] See Appendix 5, "Lament," pg. 291 of this dissertation. Perhaps Edward at the time of his death was really old and hoary, like the centenarian Branor. When Edward I probably met Rustichello da Pisa, he was in his mid-thirties. Edward died in 1307 at the age of sixty-eight.

THE ART OF CHIVALRY ACCORDING TO BRANOR LE BRUN AND EDWARD

Both Edward and Branor followed the precepts of ideal knighthood set forth by Chrétien de Troyes and Raymond Llull. Actually, Rustichello's main character of Branor seems to be a combination of Chrétien and Llull, just as Branor is a combination of Edward and Rustichello's own allegorical commentary on his current political situation. In Chrétien's *Perceval*, Perceval's mother gives her departing son advice on what a true knight should be:[94] Perceval should always help and honor ladies. He should never stay in anyone's company too long. He should learn the name and conditions of his hosts, frequently go to Mass, and should only associate with gentlemen. Likewise, Raymond Llull—who was a contemporary of Rustichello and Edward—wrote his *The Book of the Order of Chivalry* (1279-83) about what a good knight must be. According to Llull, a good knight should defend the faith of Christ against unbelievers, defend his temporal lord, and protect the weak (especially women, widows, and orphans). More importantly for Llull, a good knight must uphold the virtues of courtesy, loyalty, hardiness, magnanimity, and honesty.[95] Rustichello's Branor follows to the letter all these precepts, repeatedly saving the "weak," especially ladies in distress. He does not "defend the faith" by going on crusade, but in a sense, he defends his faith by constantly invoking God, the Madonna, and frequently attending Mass. He is courteous to all, loyal to his temporal lord King Arthur, and certainly hardy if he can live to the age of 120 years and remain "in good health until the day of his death" (*Et fu le chevalier au monde que plus longuemant vesqui en celui tenz, et qe miaus se peüst {aidier} de son cors et son grant ages jusque a la fin)*.[96] Branor is also magnanimous in

[94] The *Perceval* was written in 1130-1190.
[95] Maurice Keen, *Chivalry* (New Haven & London: Yale University Press, 1984), 8-11.
[96] *Il Romanzo*, 38:4.

that he helps and gives succor to all who ask. Lastly, he is always truthful (even though he does withhold his name).

As described by Llull, Branor and Edward also have great reverence for the "art of chivalry." This adoration for chivalry is principally demonstrated when Branor is jousting with Lancelot. Branor refuses to give his name when he jousts with all the knights at Camelot. But Lancelot, noting that Branor is an honorable knight, beseeches Branor to give him his name and condition for "the love of chivalry." "Sire knight," said Lancelot, "you have asked my name, and I have courteously given it to you; so I beg you, for the sake of chivalry, to tell me your name and your condition" (*vos m'avés demandés mon nom, et je le voz dit cortoisemant, et pour ce ce voz pri por amor de chevalerie que vos me diés et votre estre*).[97] Unfortunately for Lancelot, Branor is unable to give his name at this time, but he promises that he will soon reveal his name and condition to all. Branor is not acting unchivalrously here; if he revealed his name immediately to the court at Camelot before jousting, the educational purpose of his enterprise would be lost. Branor comes to Camelot to prove whether the Old Table Knights are better than the New Table or Round Table Knights. One senses an overall feeling of invincibility among the Round Table Knights, and Branor decides to give them their comeuppance. Moreover, if Branor had disclosed his name right away, no one would have believed him. Everyone at the court of Camelot thought Branor and all the knights from the company of Uther Pendragon were already dead. Furthermore, if these Old Table Knights were still alive, none of them should have been physically able to joust with the best Knights of the Round Table. Hence, Branor is not unchivalrous; he is merely upholding the highest standards of chivalry, and at the same time teaching the Knights of the Round Table a lesson in humility.

[97] *Il Romanzo,* 9:11.

The rules of war and chivalry are paramount to Branor, and he must always fight for what is right and with honor. Even when the evil knight Karacados kidnaps a young girl, Branor first politely asks that Karacados return her and proceeds to explain the rules of chivalry to his foe. Branor states:

> *"Sire," fet li Viel Chevalier, "je vos pri pour amor et pour henor de chevalerie que voz cest damoiselle me bialliés, car je l'ai promise a rendre a sa mere, et de ce voz en savrai buen gré, et se voz enn autres mainieres le feïstes, vos feitez contre chevalerie, car vos savés bien que nul ne puet mettre main en damoiselle qui soit pucelle tant qu'elle fust avech son pere ou sa mere. Et vos savés tot certainemant que ceste damoiselle est encore pucelle, et que l'avés tollue a son pere et a sa mere."*
>
> ("Sire," said the Old Knight, "for the sake of the honor of chivalry, I beg you to give me this maid, since I promised as a knight that you would entrust her to me to return her to her mother; I would be truly grateful if you would do this thing; if instead you decide differently, you are acting against chivalry, because you well know, no man can take a maiden who is a virgin, while she is accompanied by her father or her mother. And you also know that this maid is yet a virgin and that you took her by force from her father and mother.")[98]

Karacados refuses to give up the girl to Branor le Brun. Then Branor, who must uphold the traditional laws of chivalry, soundly trounces him. Just as Branor has previously proven his prowess against the Knights of the Round Table, he likewise gives a lesson in chivalry to Karacados. Karacados' lesson comes through his defeat. It is a hard lesson indeed, and Branor is

[98] *Il Romanzo*, 31.8.

a strict teacher, but this is the only way that Branor can prove the superiority of the Knights of the Old Table over the New Table Knights, and to remind the Round Table Knights of their infallibility and their great forefathers.

An example of Edward adhering to a strict code of chivalry (and the possible violence that could happen during a "friendly" tournament) can be evidenced by the "Little Battle of Chalons" in 1273.[99] This "battle" occurred on Edward's return trip home from the Crusades, and there Edward, like Branor, taught his foe a lesson in chivalry. The Count of Chalons invited Edward to participate in a friendly tournament, which ended up resembling a melee. Edward's men were outnumbered two to one and did not expect the ferocity with which their French adversaries attacked them. The count himself attacked Edward in a most indecorous and unknightly fashion. When the count realized "he was achieving nothing by sword-play, he threw down his weapon and grabbed Edward by the neck, trying to drag him from his horse."[100] However, Edward was too tall and strong, and the count wound up unhorsed and looking very foolish. The count then ordered his knights to attack Edward's men, but he was eventually forced to surrender. The Count of Chalons had behaved so badly that Edward ordered him to surrender to an ordinary knight because "he had disgraced himself too much to be the king's prisoner."[101] Edward made the distinction between what constitutes a good and decorous knight who behaves chivalrously and one who does not. It is interesting that Edward made no such distinction before his literary patronage of Rustichello and his crusading experience, even though he previously had fought in many jousts and tournaments.

---

[99] The city of Chalons en Champagne (near Epernay) is about 120 miles NE of Paris.
[100] Prestwich, *Edward I*, 85.
[101] Ibid., 85.

Edward was the model knight, perfect in arms and mannerisms, and this did not go unnoticed by his peers. Almost immediately after becoming king, Edward transformed himself into an ideal knight. He did this not only through his battlefield prowess, but also with his courtly behavior and by upholding the laws of chivalry. In fact, to receive a knighthood at the hands of Edward I "was actively sought and highly prized," which is, as historian Malcolm Vale notices, "a further reflection of his reputation as a knight and crusader."[102] If the "patronage of chivalrous sport and courtly literature went hand in hand," Edward, after his crusade and experience in Italy, was not only practicing to becoming a better knight but perhaps also gaining a sense of what kind of literature he would like to read and sponsor as king.[103] Simultaneously, Edward was contemplating what kind of king he wanted to be. Hence, I believe that the stories written by Rustichello da Pisa of Branor le Brun were loosely inspired by Edward's past experiences in tournaments, his physicality as a large man for his time, and his fabled reputation as a formidable knight. Edward resembles Branor most clearly in the initial episodes related to Branor because the majority of these (Episodes 1-16 of the 39 total episodes) involve Branor in a series of jousts with the lance, and as already mentioned, Edward was known as the "best lance in the world." Rustichello's Branor was a combination of both a probably real event (Rustichello in the presences of Edward I) and fiction (Arthurian stories found in Edward's "book"). Similarly, Edward was trying to forge his kingship and build a legacy through both real events (crusades and battles) and imaginary events (King Arthur and Branor legends). The mutual resonance of man and fictional character give credence to the idea that they were somehow linked through the *Compilation* of Rustichello da Pisa.

---

[102] Vale, *Origins*, 177.
[103] Barber and Barker, *Tournaments*, 21.

THE MISSING MANUSCRIPT

There are no known copies of the *Compilation* in England from this period (late thirteenth or early fourteenth centuries). However, as the great literary scholar and historian Edmund Garratt Gardner posits, there is the possibility that Edward received books from his uncle, Peter II of Savoy. Peter was a brother to Edward's mother, Eleanor of Provence, and he or perhaps Edward's Savoyard cousins could have sent him a copy of Rustichello's *Compilation* once it was completed after 1284.[104] As discussed in Chapter 1, most of Rustichello's existing works in manuscript form have been found in France and northern Italy. Although the *Compilation* was written in Italy, it is possible that Edward met Rustichello in the Italian colony at Acre or perhaps in Cyprus. It is also possible that Edward left a partial version of Rustichello's *Compilation* in Acre, since there were "mimicries on the Matter of Britain," or Arthurian parodies recorded here in 1286 when Henry II of Cyprus was crowned King of Jerusalem.[105] This same chronicle recounts that it was a splendid festival, which included *bohorts* or light tournaments imitating the Round Table with impersonations of Lancelot, Tristan, and Palamedes."[106] Nonetheless, it is my assumption that at least a partial manuscript (namely the initial episodes of Branor at Camelot) did arrive in England either as a direct copy in Franco-Italian or through a later French or Iberian translation of the *Compilation*. That being said, I believe that the bulk of the *Compilation* and many of the episodes about Branor were written after Edward's departure from Italy (after 1274). In the next chapter, I will proceed to argue that

[104] Gardner, *Arthurian Legend*, 154.
[105] Loomis, "Arthurian Influence," 553-54.
[106] Ibid., 553-54. Consequently Lancelot, Tristan, and Palamedes are also the main characters in Rustichello's *Compilation*. Since the Branor le Brun episodes are also found in a short Greek poem, which possibly places Rustichello's work in the East, will be discussed more in the next chapter specifically on Branor le Brun.

the episodes after the jousting at Camelot are a political allegory that reflects Rustichello's local reality after the historic naval Battle of Meloria between Pisa and Genova (1284).

My reasoning for thinking that Rustichello did not write the rest of the Branor episodes for Edward is that the episodes after Episode 16 do not portray King Arthur in a flattering light. These episodes contradict the ethos of English Arthurian romance, where King Arthur is usually a hero and rarely a fool. It is dubious that Rustichello would have written these episodes for Edward, who had great fondness and reverence for King Arthur. Although there are examples of Arthur acting like a fool in English Arthurian romance, it is more likely that a French romance would portray King Arthur as imprudent.[107] Hence, Rustichello in a sense front-loaded the complimentary episodes of Branor at Camelot to present them to Edward I before he left Italy; he then returned to his Branor le Brun episodes to reflect his own political situation after the English monarch's departure and the subsequent radical upheavals in Pisa.

EDWARD'S UTILIZATION OF KING ARTHUR: BUILDING LEGACY

Edward returned to England from the Crusades in 1274, and for a period of time he did not frequent or sponsor tournaments (Arthurian or otherwise). His nonparticipation in jousts may have been due to the amount of work that had accumulated in his absence, or more likely, the threat of war with the Welsh. Edward did not recommence tournaments again in England until

[107] The French and English romance tradition(s) have diverse portrayals of King Arthur. As a generalization, it is more common in the French romances rather than in the English ones that King Arthur acts like a fool and a cuckold. In in Chrétien de Troyes's *Erec et Enide*, knowing that it will bring harm to the court, Arthur insists on hunting the white stag. Also in Chrétien's *Yvain,* Arthur falls asleep at a long feast as a child would, which caused great confusion in the court. In the English romance tradition, Arthur is rarely portrayed so negatively. Nonetheless, in *Sir Gawain and the Green Knight,* Arthur acts childish when he refuses to begin a feast until he sees something great (Borroff 204). Arthur proceeds to accept the Green Knight's challenge to decapitate him, but Gawain takes Arthur's place. The members of Arthur's court question King Arthur putting his best knight in danger (Gawain). "Who would credit that a king could be counseled so, and caught in a cavil in a Christmas game?" From Marie Borroff's translation, *Sir Gawain and the Green Knight: An Authoritative Translation, Contexts, Criticism*. ed. Laura L. Howes (New York: W.W. Norton, 2010), 216.

1278, or four years after his return from the Crusades. Edward sponsored a tournament at Windsor, but there is no surviving record of what occurred on the field or whether this tournament was Arthurian-inspired.[108] However, it is quite possible that there were Arthurian implications at the Windsor tournament, since Edward and Eleanor visited the tombs of King Arthur and Queen Guinevere in Glastonbury shortly after the conclusion of the first Welsh War, also in 1278.[109] At Glastonbury, Edward had the remains of Arthur and Guinevere formally reburied in front of the high altar, and he greatly revered the remains. Although the bones of Arthur and Guinevere were discovered in 1190, Edward seems to have been the first king to take an interest in recognizing the remains of the legendary king and queen.[110] Round Tables were held by King Edward at Kenilworth and Warwick in 1279, and again at Warwick in 1281.[111] Hence, it seems that as Edward matured as a king, he increasingly used the chivalric figures of Arthur and the Round Table Knights. Notably, either Edward's father Henry III or his grandfather John also could have capitalized on the finding of the remains of Arthur and Guinevere, yet none of the previous Plantagenet kings were concerned with legacy-building through the legendary figure of King Arthur until Edward decided to do so.

After the re-interment of Arthur and Guinevere and the Round Tables in Kenilworth and Warwick, it seems clear that Edward was hinting that he was the new Arthur. It is highly significant that not until after his encounter with Rustichello did Edward start to use Arthurian characters as idealized figures of what a good knight and king should be. Edward also used the figure of King Arthur to establish his royal authority over the Welsh. The Welsh people believed

---

[108] Barber and Barker, *Tournaments,* 30.

[109] The First Welsh War occurred in 1277 and the Second in 1282-83.

[110] Prestwich rather cynically deduces that monks discovered the tomb in 1190 in order "to develop the lucrative pilgrim traffic to the abbey" (Prestwich, *Edward I,* 120).

[111] See fn. 30 of this chapter on "Round Tables."

that Arthur was the once and future king; upon being defeated in 1283, the Welsh people had to concede that perhaps Edward was the reborn Arthur. Even before defeating the Welsh, Edward took their most precious relic, known as "Arthur's crown" or Llewellyn's coronet. He later presented this crown at the shrine of Edward the Confessor at Westminster probably around 1282.[112] The seizing and dedication of the Crown were perhaps an attempt to join the Arthurian cult to the religious cult of his father Henry III, and claim the cult of Arthur for himself. If Edward was utilizing the figure of Arthur for political advantage or legitimacy to rule England, he could not make this point more forcefully with the Welsh than by seizing the crown of former Welsh kings and of the one true King: Arthur.[113] Edward could now claim that he was not only the King of the Welsh through conquest, but was also their ancestral king.

Edward's victories over the Welsh were celebrated with a great Round Table at Nefyn in 1284. Also in 1284, a tournament was held at Caernarvon to celebrate the birth of the Prince of Wales, Edward II.[114] Another link between Arthur and King Edward is the large Round Table—an actual piece of furniture, not a tournament—found in Winchester and now housed in its Cathedral. This huge table was probably made around 1290 for a tournament near Winchester to celebrate the betrothal of one of Edward I's daughters. The table was carbon-dated in 1976, and tree ring evidence places the making of the table in the thirteenth or early fourteenth century. The carbon-dating gives scientific evidence that the table was made in the reign of Edward I.[115] Edward's support of tournaments is shown by the royal household accounts; there are records of

---

[112] See R. R. *Davies, Age of Conquest: Wales, 1063–1415* (USA: Oxford University Press, 2000), 544 where Davies relates that this crown was probably destroyed in 1649 on the orders of Oliver Cromwell.

[113] Edward also seized the cross of Neath and the stone of Scone from the Scots. See Powicke, *King Henry III*, vol. 2, 516, once again showing his physical appropriation of signs of royal legitimacy.

[114] Barber and Barker, *Tournaments*, 30.

[115] For information on the Round Table (physical object), see Geoffrey Ashe's entry for "Winchester," in N. Lacy's *New Arthurian*, 518–519 and Martin Biddle's, *King Arthur's Round Table: An Archaeological Investigation* (Woodbridge, England: Boydell and Brewer, 2000), 182.

six tournaments attended by John of Brittany in 1285-6 and seven attended by John of Brabant in 1292-3.[116] Both of these young men were the betrothed of Edward's daughters, and it seems that Edward covered their expenses for these tournaments.[117] Hence, Edward's physical appearance, appropriation of Arthurian artifacts, and the literary works that he inspired (i.e., the *Compilation*), were all utilized to show his royal legitimacy.

In 1284, Edward announced his intention take up the cross again, but he was never able to embark on a second crusade after his return to England in 1274. However, he did renew his vow to go on crusade again in 1287 and also in 1291. Edward did this in the presence of his advisor and friend, Otto de Grandson, who was stationed in Acre. Since Edward made this vow publicly, historian Sandra Raban notes that "this indicates that it was not just a token gesture."[118] However, Edward soon had to give up this vow because he was too embroiled in the war in Scotland and could not go on another crusade.[119] Edward's last dealings with Italy before he became preoccupied with local affairs was his attempt in 1288 to make peace between Naples, France, and Aragon, but the treaty that Edward tried to negotiate between the warring parties came to nothing.[120] Soon after this, Acre fell to the Muslims in 1291, and talks of another crusade ceased.[121] Despite Edward I's lack of success in crusading, he nonetheless "was the sole ruler with crusading experience" and the papacy continued to look at "him to assume leadership whenever a new Crusade was mooted."[122] Furthermore, because Edward had gone on crusade and was willing to do so again, he was considered the most pious, noble, and valorous knight in

---

[116] Barber and Barker, *Tournaments,* 30-31.
[117] Ibid., 30-31.
[118] Raban, *England,* 168. To clarify, Otto was in Acre and not Edward.
[119] Housley, *Italian Crusades,* 88.
[120] Oscar Browning, *Guelphs & Ghibellines; A Short History of Mediaeval Italy from 1250-1409* (London: Methuen, 1893), 47.
[121] For an in-depth account of the Fall of Acre, see Riley-Smith, *The Crusades,* 244-265.
[122] Raban, *England,* 168.

all of Christendom. In fact, many chivalric authors (and probably Edward as well) believed that "the salvation of the world and the maintenance of justice alike depend on the virtues of nobility, and in bad times, only chivalry can provide a remedy."[123] Hence, to make tournaments seem more chivalric, regal, orderly, and "noble," Edward enacted his Statute of Arms in 1292.[124]

Edward would not permit other knights to repeat the disgraceful behavior of the Count of Chalons, and with his new statute he paved the way for the future development of the laws of war in England.[125] In 1294 there was yet another tournament at Bar-sur-Aube to celebrate John of Brabant's marriage to Edward's daughter Margaret. A similar tournament seems to have held to celebrate the marriage of a different Margaret (daughter of Marie de Brabant) to the sixty-year-old Edward I of England in 1299.[126] At Edward's wedding tournament, there were play-like interludes that recalled Edward's triumphs over the Welsh, the Scots, and the barons.[127]

---

[123] Huizinga et al., *Men and Ideas,* 198.

[124] However, several scholars argue that Edward enacted this legislation in 1267 instead of 1292. See N. Denholm-Young, "The Tournament in the Thirteenth Century," in *Studies in Medieval History presented to F.M. Powicke,* eds. R.W. Hunt, W.A. Pantin, R.W. Southern (Oxford, 1948), 257-62. Also see Barber and Barker, *Tournaments,* 38, Kaeuper, *War,* 211, and Keen, *Chivalry,* 86, for Edward's regulation of tournaments.

[125] Huizinga et al., *Men and Ideas,* 203.

[126] Eleanor of Castile died in 1290 at the age of forty-nine.

[127] Loomis, "Arthurian Influence," 558.

The use of Geoffrey of Monmouth's *Historia* to justify Edward's claims to Scotland to Pope Boniface VIII can be found in Pierre or Piers or Peter de Langtoft's *Chronicles* written during the reign of Edward I. As Gransden points out, these chronicles had a "'royalist' view of history" much as "romance histories had the king (or an important nobleman) as hero," which is taken by Rustichello in his portrayal of Edward. See Antonia Gransden's *Historical Writing in England* (London: Routledge & Kegan Paul, 1974), 441. Langtoft used Geoffrey primarily to provide a justification for Edward I's policy of subjugating Scotland, and to a lesser extent he used him to justify the defense of English rights in Gascony. According to Geoffrey, Brutus had ruled all of Britain, and King Arthur had tried with varying degrees of success to rule the same territory as well as France. Merlin had prophesied that England, Scotland, and Wales would be reunited at an unspecified time. Langtoft used Geoffrey's pseudo-history to provide precedent for Edward I's claims; he also quoted the historical fact that John Balliol had paid homage to Edward (Ibid 477-78). Langtoft ascribed chivalric virtues to King Edward, who was "the flower of chivalry" second only to King Arthur. Langtoft writes that Edward was:

> "Of chivalry, after king Arthur,
> Was king Edward the flower of Christendom.
> He was so handsome and great, so powerful in arms,
> That of him may one speak as long as the world lasts.
> For he had no equal as a knight in armour
> For vigour and valour, neither present nor future."

(Pierre Langtoft, in *Rerum Britannicarum Medii Aevi Scrptores,* 381.)

According to the chronicle of Lodwijk, Edward was personally active in the arrangements for this tournament. Lodwijk describes a mock performance of Edward's conquest of Wales that culminates with his descent into a cave containing King Arthur's bones, much like the Febus tale from the *Guiron le Courtois,* which also inspired the character of Branor in Rustichello's *Compilation*.[128]

The last official Arthurian-inspired event in Edward's reign was the festivities held when his son, Edward of Caernarvon (the future Edward II), was knighted in 1306. The anonymous chronicler writes:

> Never in Britain, since God was born,
> Was there such nobleness in town nor in cities,
> Except Caerleon in ancient times,
> When Sir Arthur the king was crowned there.[129]

The 1306 *Flores* goes on to describe the mass investiture of over two hundred and fifty knights at Westminster by Edward I, followed by a banquet known as the Feast of Swans.[130] At this feast, Edward allegedly took his son aside and talked to him about the political significance of chivalry, which was a concept he knew well and had utilized successfully in his reign.[131]

Arguably, Edward's true intention in the use of King Arthur was to reestablish his authority in England and legitimize his rule. The horrible reign of his father Henry III had almost

---

A description that could readily be used for Branor le Brun, with the exception that Branor was in the generations of knights *before* King Arthur. Edward is not successful in Scotland and dies. See section on Pierre Langtoft, in *Rerum Britannicarum Medii Aevi Scriptores: or, Chronicles and Memorials of Great Britain and Ireland during the Middle Ages* (London: Longman, 1858), 154-383.

[128] Lodwijk Van Velthem, *Voortzetting van den spiegel histproae*; (1248-1311), vol. 1, ed. H. Van der Linden et al. (Brussels: Paleis der Academiën, 1906), 295-321. For information on Febus, see fn. 49 and fn. 77 of Appendix 1.

[129] H. Rothwell, *English Historical Documents 1189-1327* (London: Eyre & Spottiswoode, 1975), 253.

[130] Powicke gives the figure of 300 new knights (514), while Guisborough says 297 knights and Ashmole says 267 knights (Powicke, *King Henry III*, vol. 2, 514-15, fn. 2).

[131] Ibid., 515.

resulted in the loss of the kingdom to the barons, and Henry's ineptitude cost England most of its holdings in France. Although no one could doubt Henry's piety, he was certainly not the ideal knight, strong ruler, or military leader that England needed. But Edward, following the trend of his time that considered past (and often fictionalized histories) as real, could claim that he was the "son" of a greater King who was not his actual father, but his forefather King Arthur.

At his coronation festival, Edward II made the famous claim that he would never sleep more than one night in the same place until Scotland was taken for his father, Edward I. But like his grandfather, Edward II did not have the stuff of great knights or kings, and his words were ultimately hollow. Unlike his father, Edward II did not care for sports, tournaments, or Arthurian lore, although he did let his friend Piers Gaveston hold several tournaments. However, unlike his father, Edward II, Edward III *did* want to continue the Arthurian traditions of his grandfather Edward I when he founded his own order of knighthood in imitation of King Arthur. This order later turned into the Order of the Garter, but for some reason, all the Arthurian associations of this Order were ultimately dropped.[132] It seems that Edward I started a trend in his use of Arthurian lore in his kingship that his grandson Edward III also followed. That is when faced with a weak father who has poor leadership skills, create one's own legacy with the mythology of the "Father of Britain"—i.e., King Arthur.

CONCLUSION

In the end, chivalry, literature, and Arthur were all vital to Edward I's reign. However, critics such as Prestwich find it difficult to explain how the "Hammer of the Scots" could enjoy Arthurian romance, and these critics often dismiss or overlook the many instances where Edward

[132] Loomis, "Arthurian Influence," 554.

was influenced by or directly influenced literature. Prestwich definitively states that: "the Arthurian myth was undoubtedly of interest to Edward, but it was certainly not a dominating influence."[133] However, with the many instances of Edward utilizing Arthurian legend after he became king, it is evident that Arthur was a dominating influence in Edward's reign. Whether Edward used Arthur for political gain, out of a genuine love of the subject matter, or to usher in early ideas of nationalism is still an ongoing question for historians and literary scholars. Throughout his life, Edward tried to create a chivalric world by re-imagining and re-instantiating the legend(s) of King Arthur; perhaps the initial spark for doing so was his wanderlust for the East and an inspirational story that he heard from a Pisan notary called Rustichello da Pisa.

As Maurice Keen notes, the society of the late Middle Ages placed high value on the virtues of honor, largesse, loyalty, and courage.[134] Edward embodies all of these virtues through his martial exploits and his love of tournaments. As Kaeuper explains:

A fourteenth-century ruler could love tournaments, and fight in them himself; he could listen with rapt attention to romances and use chivalry as a "form for political thought" which reduced the appalling complexity of events to "a grave spectacle of honor and virtue" . . . a noble game with edifying and heroic rules.[135]

However, I find the notion of Edward manipulating Arthurian legend merely for political purposes (which seems to be the general consensus of historians) to be overly cynical, especially since Edward appears to have had a genuine interest in Arthurian romance *before* he ever became involved in politics. Edward did not utilize the figure of King Arthur until after he met Rustichello and after he had become king. He was inspired by Arthurian romance, just as he

---

[133] Prestwich, *Edward I*, 121.
[134] Keen, *Chivalry*, 80.
[135] Kaeuper, *War*, 192.

himself became the inspiration for Rustichello's first attempt at an Arthurian romance work. And just as Branor was the greatest original Italian romance character of his time, so too was Edward renowned as "one of the greatest monarchs of his time and country."[136] It is ironic that Edward's genuine, and not the overtly political love of Arthurian romance, enabled Rustichello to add a political dimension to his creation of the new character (Branor) initially modeled on Edward. The discussion of the local political allegory in Rustichello's original episodes of Branor le Brun will be the next chapter of this dissertation.

[136] "Sera un des plus grands monarques de son temps et de son pays. . . " C. Fabre, "Un sirventés," 225.

Chapter 3 – Ghibelline Knights? Branor le Brun and Rustichello da Pisa

The *Compilation* is a mixture of language, genres, romance texts, and Celtic mythology, and the combination of these elements is most apparent in Rustichello da Pisa's original episodes of Branor le Brun. As seen in Chapter Two, the initial jousting episodes of Branor were greatly influenced by Rustichello's dealings with King Edward I of England. However, soon after Edward I left Italy from the Crusades (1273), chaos erupted in Rustichello's hometown of Pisa. Pisa's isolationist and Ghibelline allegiance in politics put the city at odds with most of Tuscany, the Guelph cities throughout Italy, their foreign supporters, and of course, the Pope. More important for this dissertation, however, is how the Guelph and Ghibelline struggles of thirteenth-century Pisa personally affected Rustichello da Pisa and his Arthurian romance.

The problems Pisa faced in the late thirteenth century were both local and global. Not only did Pisa have "local" conflicts due to its endless wars with surrounding cities, but there was also constant fighting among the noble and aristocratic classes within the city.[1] Globally, Pisa had to deal with foreign interlopers who were often involved in its internal politics. But to preserve its livelihood as a mercantile trade nation, Pisa had to maintain its often-strained relations in Tuscany and abroad. This delicate and difficult balancing act of diplomacy required that Pisa have skilled men to perform it, and Rustichello da Pisa was probably one of these men. Rustichello was most likely a notary or clerk for Pisa who worked in the law and seigniorial courts within and outside the city. Furthermore, Rustichello witnessed firsthand the political struggles of the Pisan Commune. With the original episodes of Branor le Brun, Rustichello made

[1] Historians Emilio Cristiani and Marco Tangheroni both note the great difficulty in defining what "noble" class means in Pisa and its differentiation from the "aristocratic" class. It is likewise difficult to determine exactly what "feudalism," nobility," and "chivalry" meant in the Pisan context. See E. Cristiani, *Nobiltà,* 32 and 191. See also M. Tangheroni, *Medioevo tirrenico: Sardegna, Toscana,e Pisa* (Ospedaletto, Pisa: Pacini, 1992), 205-6.

his *Compilation* "local" by infusing it with a subtle allegory that commented on his personal political situation after Pisa lost the naval Battle of Meloria to Genoa in 1284.[2]

After the Battle of Meloria, thousands of Pisans were captured and imprisoned in Genoa, and among them was Rustichello da Pisa. Most of these prisoners were not released for over fourteen years due to the constant conflicts Pisa had within its own city walls and with other Italian communes. Rustichello was understandably embittered by his long imprisonment in Genoa, which was essentially due to the political machinations of Ugolino della Gherardesca and Nino Visconti. Ugolino and Nino were among the most powerful men of Pisa, and they adhered to Guelph party politics at a time when the majority of Pisans were Ghibelline. They were the men responsible for preventing a lasting peace with Genoa, which would have secured the release of the Pisan prisoners taken at the Battle of Meloria.[3] These captured men were for the most part Ghibelline and still held great political sway in Pisa, despite their imprisonment. The political influence of the Pisan prisoners eventually led to the downfall of Ugolino and Nino. Thus Rustichello's most likely wrote or re-wrote his original episodes of Branor le Brun as a veiled denunciation of Ugolino and Nino's politics, but at the same time, to make an appeal for a strong leader who would oppose them and the Pisan Guelph faction.

THIRTEENTH-CENTURY PISA: A BRIEF HISTORICAL OVERVIEW

From the 1220s through the 1260s, Pisa supported the Hohenstaufen Emperor Frederick II and his successors. By the late thirteenth century, Pisa was a maritime powerhouse and a

[2] For a brief account of the battle, see Charles D. Stanton, *Medieval Maritime Warfare* (South Yorkshire: Pen and Sword Ltd., 2015), 131-35, 159.

[3] Meloria is a small rocky island surrounded by a shoal off the Tuscan coast (about 4 mi. NW of Livorno). There were two battles here between Pisa and Genoa. The first battle was in 1241 and ended with a Pisan victory. The second and more famous battle was in 1284, and in it, Pisa suffered a devastating loss to Genoa. In the literature, the "Battle of Meloria" or simply "the Meloria" refers to the battle of 1284.

devoted Ghibelline city.[4] In the broadest terms, "Ghibellines" were landholding aristocrats who viewed the Papal States as a threat to their private interests. On the other hand, "Guelphs" were men from wealthy merchant families who saw the Emperor as a threat to their local interests. Although party lines were often blurred, smaller cities tended to be Ghibelline, and larger ones tended to be Guelph. To complicate matters further, for many Tuscan towns, "Ghibelline" did not necessarily mean "anti-papal," but rather any city with a policy against Florence since Florence was the most powerful town in Tuscany. In Pisa, most of the men who were aristocrats, nobles, or in the bourgeois class were Ghibelline, but there was also a small Pisan Guelph faction. The Pisan Guelphs were generally for the aristocrats and nobles of the city, and they therefore disputed the rise of the citizen government favored by the Ghibellines.[5] Hence in Pisa's case, it is impossible to distinguish the Ghibelline and Guelph parties on any economic basis since there were aristocrats and nobles in both the Pisan Ghibelline and Guelph factions.

It was the Pisan Ghibelline allegiance that put the city in opposition with the majority of Tuscan cities. Furthermore, Pisa's isolationist and rebellious position made any idea of a united Tuscany impossible in the late thirteenth century.[6] Thus, the Pisan government frequently found itself at odds with both internal (Pisan Guelphs) and external political powers (other Guelph supporters throughout Italy and their foreign allies). Furthermore, Pisa's constant siding with the Emperor and its Ghibelline allegiance often embroiled the city in wars which, in 1241, led to the excommunication of Pisa by Pope Gregory IX. After this excommunication, the Pope formed an

---

[4] Nonetheless, Pisa did not use the term "Ghibelline" until after 1270. For a more detailed explanation of the political situation in Pisa, see Tangheroni, *Medioevo,* 220-44, but especially 237.

[5] The regime of Nino and Ugolino was not strictly Guelph. . . even the Genoese Jacopo Doria notes in the 1280s that Pisa still had "paucissimi tunc temporis reperirentur in civitate pisana" (Marco Tangheroni, "La situazione politica pisana alla fine del Duecento tra pressione esterne e tensioni interne," in *Genova, Pisa, e il Mediterraneo tra Due e Trecento: Atti della Società Ligure di storia patria,* vol. 24, pt. 2 (Genova: La Società Ligure di storia patria, 1984), 107.

[6] See Giuseppe Petralia, "Genesi ed identità della Toscana medievale," in *Bollettino Storico Pisano,* 69 (2000): 244.

alliance with Pisa's enemies and supporters of the Guelph cause: Florence, Genoa, and Venice. The Pope did this to impede the Hohenstaufen, who had legitimate and hereditary claims in Italy. This excommunication of Pisa (there were many) lasted for over sixteen years, and Pisa was not restored to the Church until after 1257.[7] Thus, due to its support of the Hohenstaufen, Pisa was frequently on bad terms with the Church and its Guelph supporters both within and outside the city.

The Hohenstaufen tried to ease the conflicts between two of the most powerful and belligerent leading families in Pisa—namely, the della Gherardesca (Ghibelline) and the Visconti (Guelph). However, despite the involvement of the Hohenstaufen Emperor(s), the conflicts between these two aristocratic families continued throughout the thirteenth century. The problems between the della Gherardesca and the Visconti were not just personal; they also caused polemics in the Pisan government. Although Pisa always had difficulty finding equilibrium among its noble, aristocratic, aristocratic non-noble, and bourgeois classes, these problems were significantly exacerbated by the della Gherardesca and the Visconti. Moreover, the various class conflicts made it difficult for Pisa to find a temporal leader or leaders to govern the city. Furthermore, finding a leader was particularly difficult after the deaths of all the Hohenstaufen, who often helped buffet the Pisan class tensions and familial feuds in the noble class.

The Hohenstaufen were the legitimate heirs to the Kingdoms of Sicily and Naples. However, in 1265 Charles of Anjou was by papal approval proclaimed King of Sicily. The

[7] Pisa was under interdict many times during the twelfth and thirteenth centuries. In 1241, Pope Gregory IX excommunicated the entire city of Pisa for attacking a ship carrying papal legates to negotiate with the Emperor. This interdict was lifted in 1257. Pisa was again placed under interdict in 1268, when the city sided with Conradin (Corradino) against Charles of Anjou. This interdict was lifted in 1273; see Elizabeth P. Rothrauff's section on "Pisa," in *Medieval Italy: An Encyclopedia*, vol. 2, ed. Christopher Kleinhenz et al. (New York: Routledge, 2004), 903.

usurper King Manfred (Hohenstaufen) was killed by Charles at the Battle of Benevento in 1266, and then Charles expelled all Pisans from his territory because of their support of Manfred. After Manfred's death, Pisa supported Corradino, the last legitimate Hohenstaufen Emperor. Pisa's Ghibelline support of Corradino placed the city once again under interdict in 1268. At the Battle of Tagliacozzo, Corradino's forces were defeated, and he was executed soon after that battle at the age of sixteen (1268).[8] After the defeat of the last male Hohenstaufen by the French in 1268, Peter III of Aragon claimed the rights to Sicily through Manfred's only surviving daughter, Constance of Sicily. Nonetheless, by 1270 Charles of Anjou had full control over the Kingdom of Sicily, legitimized through the Pope and his conquests, and Pisa's imperial dreams were dashed forever.[9]

The early 1270s was a very tumultuous and also exciting time for Italy. Many foreign crusaders traveled through the peninsula on their way to the Holy Land, including Edward I, and many foreign invaders claimed rights to portions of Italy. However, Pisa needed to concentrate on its own well-being and its livelihood in trade, and not on the wars that involved so many other European nations and dignitaries. Because of the papal interdict and the majority Guelph leadership in most Italian cities, Pisa's trade in Italy was hampered. The city therefore concentrated on trade in Muslim-ruled lands. As historian Eliyahu Ashtor notes, Pisan merchants were especially favored by Muslim sovereigns because they did not participate in the Crusades

[8] For more on the Pisan interdict and its relationship with Charles, see Alma Poloni, "Gli uomini d'affari Pisani e la perdita della Sardegna," in *Per Marco Tangheroni. Studi su Pisa e sul Mediterraneo Medievale offerti dai suoi ultimi allievi*, ed. Cecilia Iannella (Pisa: ETS, 2005), 138.

[9] Technically, Corradino was not the last male Hohenstaufen still living in the late 1260s. His Uncle Enzo of Sardinia was imprisoned in Bologna for over 20 years and did not die until 1272. Enzo was the illegitimate son of the Emperor Fredrick II. Enzo's daughter Elena was married to Ugolino della Gherardesca's son Guelfo. Hence, Ugolino claimed his rights in Sardinia through Guelfo's marriage to Elena.

of the 1270s.[10] Pisa's non-partisan stance during the Crusades allowed for the free flow of luxury items from the Middle East, but Pisa needed the Sicilian ports to continue its lucrative trade with Muslims and in southern Italy. After the interdict on Pisa was lifted in 1273, peace negotiations with Charles and commerce could recommence. These peace talks with Charles were left to jurists and notaries from the bourgeois class, the rich "new" men of Pisa who were responsible for its government. Pisa needed Charles' ports for trade and, likewise, Charles needed Pisa to secure a foothold in northern Italy so he could enlarge his empire. Nonetheless, in the early 1270s, most of Pisa's problems lay within not outside the city.[11]

By the mid-1270s the divisions in Pisa between the old noble class and the new bourgeois class became very apparent. Unfortunately for Pisa, these internal divisions made the transition from *Comune* to a *Signoria* a much slower process than it was for other Tuscan cities.[12] Furthermore, after the extinction of the Hohenstaufen, Pisa was left exposed and without a strong foreign protector to mediate internal problems. It was perhaps at this time that Pisa realized the futility of relying on foreign monarchs. Pisa understood that it could only rely on itself to survive as a sovereign republic. Pisa also recognized that the city was best governed if power was with the many and not with a single individual who could become a tyrant.

A government controlled by the citizenry or *Popolo* in Pisa began in 1254, when the Pisan citizens rebelled against the noble class. After 1254, Pisa was administered by the complex

---

[10] For Pisan and Genoese relations with Muslims in the late thirteenth century, see Eliyahu Ashtor, "Il retroscena economico dell'urto Genovese-pisano alla fine del duecento," in *Atti della Società Ligure di storia patria,* vol. 2, pt. 2, (Genova: La Società Ligure di storia patria, 1984), 80.

[11] By 1282, the Pisans had re-established its relationship with Charles, and Pisa even sent men to help him in the aftermath of the Sicilian Vespers of 1282; see E. Ashtor, "Il retroscena," 80.

[12] Since Pisa never had a single leading family such as the Medici in Florence, one could argue that it never actually became a *Signoria.*

governmental body known as the *Anziani del Popolo* or *Anzianato* (Elders of the People).[13] It took a long time for the *Anzianato* to wrest control of the city away from the "noble" class, and these men, like Rustichello da Pisa, were responsible for negotiating with foreign dignitaries in the courts and cities outside of Pisa.[14] The prominent judges, notaries, and magistrates who dominated the *Anzianato* often helped the "new men" from the bourgeois guilds navigate the murky waters of internal Pisan politics. These "new" and newly rich men were expected to help govern Pisa, yet they were unaccustomed to the established traditions found in the landed Pisan aristocracy. Furthermore, the *Anzianato* was important because it gave a secure form of representation to the citizenry (*Popolo*), which prior to 1254 had been unrepresented or underrepresented in decisions regarding the city. Hence, any continuation of traditional forms of government in Pisa depended on the *Anziani* because they knew Pisan traditions and how to handle the aristocrats and nobles.[15]

The Pisan government was extremely complicated, primarily because Pisa wanted to uphold past institutional arrangements but at the same time address the ever-changing dynamic between the aristocracy and the *Popolo*. Nobles were excluded from important political positions, but they still influenced the city guilds and thus the municipal government. Nonetheless, the *Anzianato* did not give Pisa a stable form of government. This instability was due to the institutional system and the constant rotations in the administrative councils of the

---

[13] The *Anzianato* was perhaps founded as early as 1237, but no historical document attests to this fact. It was an extremely complicated body made up of twelve elected officials representing the four quarters of Pisa, with three representatives from each of the main guilds of the mercantile class. Although technically one could be in the *Anzianato* without being in a guild, a "popolares non artifices," this was usually not the case (see E. Cristiani, *Nobilità*, 28 and 113). The main guilds were of the tanners, ironworkers, butchers, and furriers. By 1267, more guilds were added, including those of vintners, shoemakers, and notaries; see David Herlihy, *Pisa in the Early Renaissance; A Study of Urban Growth* (New Haven: Yale University Press, 1958), 60-62.

[14] By 1278, the *Anzianato* controlled all Pisan finances. These were previously controlled by the aristocratic senate; see Herlihy, *Pisa*, 59.

[15] For traditions and the new ruling class of Pisa, see Cristiani, *Nobiltà*, 191 and 273-74, and also Tangheroni, *Medioevo*, 212.

Anzianato.[16] Ideally, the *Anzianato* was supposed to be immune to both internal and external political influences and only involved with the affairs of the city; this, of course, rarely happened.[17] The Pisan governmental system was nonetheless efficient due to the many control mechanisms and advisory bodies preventing any one party, guild, or individual from dominating the government—that is, until Ugolino della Gherardesca came to power in Pisa in the mid-to-late 1270s.

UGOLINO, NINO, AND RUGGIERI

Many of the internal and external tensions that strained the government and economy of Pisa in the late thirteenth century stemmed from conflicts between the della Gherardesca and the Visconti families over their holdings in Sardinia.[18] In 1271, Ugolino della Gherardesca gave his daughter in marriage to his former enemy, Giovanni Visconti. This union solidified the previously tumultuous relationship between the two families, but it also made the Ghibellines in Pisa suspicious of Ugolino's true allegiance. When Ugolino aligned himself with a notoriously Guelph family, he divided the city, and by 1274 there was complete disorder in Pisa. Ugolino and Giovanni had the support of the small Pisan Guelph faction, but this party was vastly outnumbered by the Pisan Ghibelline majority. Nonetheless, Pisa felt threatened by the many Guelph supporters of Ugolino and Giovanni, if not necessarily by the small Guelph faction within it. Ugolino further antagonized the Pisan government when he claimed cities for himself

---

[16] For example: the *Anzianato* changed leaders every two months, and although nobles were not allowed in this council, aristocratic non-nobles were, and the nobles still influenced the council of the *Anzianato*. See Alma Poloni, *Trasformazioni della società e mutamenti delle forme politiche in un comune italiano: Il popolo a Pisa* (Pisa: ETS edizioni, 2004), 383 and 177. To further complicate an understanding of the "ruling" class in Pisa is the fact that many families of the consular aristocracy often merged with families from the new bourgeoisie class. For influence on the guilds and intermarriage in the aristocracy, see Tangheroni, *Medioevo*, 212 and 203, respectively.

[17] For the neutrality of the *Anziani*, see Cristiani, *Nobiltà,* 211.

[18] Historically, the city of Pisa was Ghibelline. The della Gherardesca oscillated between the Guelph and Ghibelline parties, whereas the Visconti were almost always Guelph.

and his kin in Sardinia, and not for the city of Pisa. Ugolino then gave Giovanni Visconti a castle at Montopoli.[19] When the *Capitano del Popolo*, or Captain of the People of Pisa, finally intervened and asked Ugolino to relinquish all his claims in Sardinia in favor of the Pisan Commune, Ugolino refused.[20] Shortly after this, Ugolino returned to Pisa from Sardinia and was quickly arrested. Giovanni fled back to Sardinia, and Pisa banned him from the city. Once Ugolino accepted the demands of Pisa and agreed to relinquish all his rights and properties in Sardinia and the castle at Montopoli, he was freed from prison. However, Ugolino really had no intention of returning either the Sardinian cities or the castle to Pisa; he merely lied to regain his freedom, and in 1275 he fled Pisa to get help from his Guelph supporters and Giovanni Visconti.[21]

Pisa proceeded to confiscate the lands and property of Ugolino and Giovanni and banished them from the city along with their Pisan-Guelph supporters. With Lucchese and Florentine help, Giovanni was able to take back the castle at Montopoli. However, Giovanni held the castle for only a brief period of time and died in 1275. Giovanni left Ugolino in charge of his claims to Montopoli and in Sardinia, and he also left his young children in Ugolino's care.[22] In Florence, Ugolino began plotting his return to Pisa with the help of Charles of Anjou, and the other Guelphs in Tuscany. In 1275, Ugolino and his sons won two battles against Pisa, and he proceeded to negotiate humiliating peace terms for the city (1276). Ugolino then arranged for

---

[19] Montopoli is about 20 miles east of Pisa. Throughout the thirteenth-century, Lucca and Pisa constantly fought over this castle, which was of great strategic importance. Florence often had to intervene in these quarrels and usually sided with Lucca.

[20] Usually *Capitani del Popolo* or Captains of the People were in office for six months. If there were problems with the captains, the Pisan people could petition the *Anziani* or Elders for help. See Tangheroni, *Medioevo*, 310.

[21] Ultimately, all the conflicts that Pisa had with Ugolino arose because of his landholdings in Sardinia. But interestingly, as Marco Tangheroni points out, the Sardinian holdings of both the della Gherardesca and the Visconti families were completely legitimized through marriages, wills, and statutes that granted them lands and trade rights in Sardinia; see Tangheroni, "La situazione," 102.

[22] One of the children that Ugolino was in charge of was most likely Nino Visconti.

pardons for himself, the Visconti, and all other Pisan Guelphs who had been banished. Pisa was forced to give back all it had taken from Ugolino in Sardinia, and also to return the seized properties of the other Pisan Guelphs.[23] Pisa then had to grudgingly accept the della Gherardesca and the Visconti back into the city.

By the 1280s, Ugolino della Gherardesca and the Guelph party in Pisa held more political sway because they were backed by Charles of Anjou and the strongest of Tuscan cities, Florence. But in the early 1280s, Pisa was more preoccupied with its escalating conflicts with Genoa, its longstanding enemy. War with Genoa began again in 1282, and the Pisan-Genoese conflict came to a head in 1284. Ugolino, now more decisively Guelph, did not have an easy task reinserting himself into the city or the Pisan government. Historian Alma Poloni points out that nobles in the Pisan government (Ugolino was a Count) were barred from holding significant political positions, but Ugolino must have regained some of his power by August 1284 when he commanded a third of the Pisan fleet against the Genoese in the naval Battle of Meloria.

The Battle of Meloria was, according to historian Roberto Lopez, "the most important maritime battle in the Middle Ages." Furthermore, the battle most certainly was the beginning of the end for Pisa.[24] Since Pisa lost most of its military fleet at the Meloria, it was no longer a threat to other maritime republics, and this risked its own independence. Genoa took from nine to sixteen thousand Pisan men captive after the battle, and among these prisoners were the current *podestà* or mayor of Pisa, the main supporters of the Pisan Ghibelline party, and Rustichello da Pisa.[25] Due to the lack of men and warships, Pisa was now left vulnerable to attacks from other

---

[23] For the first time the term "Pisan Guelph" is used in these peace negotiations ("*pars ecclesie seu guelforum exititiorum de civitate pisana"*); see Tangheroni, *Medioevo*, 236.

[24] Geo Pistarino citing R. Lopez, "Politica ed economia del Mediterraneo nell'età della Meloria," in *Genova, Pisa, e il Mediterraneo tra Due e Trecento*, vol. 24, pt. 2 (Genova: La Società Ligure di storia patria, 1984), 34-35.

[25] Pisa lost seven galleys and from 23 to 33 of its military ships in the battle. According to D. Herlihy, the number of casualties from the Battle of Meloria is unknown (Herlihy, *Pisa*, viii). However, Ceccarelli Lemut, citing

Guelph Italian communes. Pisa also faced the dilemma of finding a political leader, since most of its chief men were dead or imprisoned in Genoa.

Just two months after the Battle of Meloria, Genoa, Florence, Lucca, and the other Guelph cities in Tuscany formed a League against the city and attacked it.[26] Now Pisa could either side with Ugolino della Gherardesca or risk fighting three different cities when manpower was already depleted. Ugolino was made *podestà* and *Capitano del Popolo* for ten years because he was the only candidate that the other Guelph cities in Tuscany would accept. He quickly entered into negotiations with Florence and Lucca, but Pisa, having learned from past betrayals, knew that it could not fully rely on Ugolino. So Pisa also sought the protection of Pope Honorius IV, who forbade under penalty of interdict any hostile actions against Pisa. By this time, the papal policy was aimed predominately at Genoa, since Lucca and Florence left the League after they were ceded Pisan lands and castles. It is ironic that any peaceful rapport Pisa had with its sworn enemies of Florence and Lucca was due to its reliance on Ugolino as leader and sole representative of the Pisan populace.[27] Moreover, if it had not been for Ugolino's swift negotiations in 1286, Pisa could have easily been destroyed by its Guelph enemies.

Rustichello da Pisa was among those captured at the Battle of Meloria, and he probably finished his Arthurian *Compilation* while imprisoned in Genoa. Because Rustichello had

---

contemporary chronicles, writes that the number of prisoners taken varies from nine to sixteen thousand. She estimates (still using the chronicles) that roughly 1,285 Pisans died during the battle. For all the contemporary accounts of losses and their variants, see Ceccarelli Lemut, "I Pisani prigionieri," 78. For more information on Pisan prisoners after the Battle of Meloria, also see Tangheroni, *Politica, commercio,* 78.

[26] The ceding of Pisan castles to Florence and Lucca is the political treachery that condemned Ugolino to Antenora by Dante (*Inf.* 33.85-86). Pisa lost the castles at Viareggio, Bientina and Ripafratta to Lucca. It also lost Monte Fucecchio, Castelfranco, Santa Croce, Monte Calvoli, and Pontedera to Florence. Essentially, all these losses reduced Pisa to the lands immediately outside of its city walls; see Pietro Balan, *Storia d'Italia di Pietro Balan. Aumentata e corretta dall'autore,* vol. 4, ed. Rodolfo Maiocchi et al. (Modena: Tipografia Pontificia ed Arcivescovile dell'Immacolata Concezione, 1894), 138, fn. 4.

[27] Florence was especially keen on maintaining a lasting peace with Pisa for trade reasons. Pisa was known as the "bocca della Toscana" or "mouth of Tuscany," and as a port city, it was extremely important to Florence; see Tangheroni, *Medioevo,* 108.

previous notarial and scribal duties at the court of Charles of Anjou and in Pisa, he was most likely allowed to write, transcribe, and copy books in the scriptorium of Genoa. That imprisoned men were writing in Italy should not come as a surprise—this fact has been well documented by M. L. Ceccarelli-Lemut, M. L. Meneghetti, and F. Cigni. [28] Nor is it surprising that a revised version of the Branor le Brun episodes could function as a political allegory, since Rustichello himself was probably involved in the political and Ghibelline administration of Pisa.[29] Medieval historian Cecilia Iannella thinks that original and autonomous writing in the "citizen context" was not produced in Pisa.[30] However, I believe that literature for the *Popolo* was being produced by Pisans, even though these Pisans were not technically in Pisa. Hence, I hope to modify the supposition that Pisans were not writing for the citizenry in prose in the late thirteenth century with my topical reading of the Branor le Brun episodes found in the *Compilation*.[31] To my knowledge, no one has previously recognized that Rustichello was comparing and contrasting the old and new governing structures through his character of Branor le Brun. Furthermore, Rustichello is obliquely seeking help for himself and his fellow Pisan prisoners through the

---

[28] For writers in prison in Italy, see Ceccarelli Lemut, "I Pisani prigionieri," 77-88, Meneghetti, *Scrivere in carcere,* 185-99, and Cigni, "Copisti prigionieri,"425-39.
Although some of these imprisoned writers were from the fraternal orders, this is certainly not the case for all incarcerated writers, and probably not the case for Rustichello da Pisa. For imprisoned writers in fraternal orders, see Cigni, "Copisti prigionieri," 426-27.

[29] Philologist Stefano Carrai writes that Pisan authors were not court functionaries but intellectuals, perhaps notaries, judges, doctors, or bankers who were usually busy in the administrative roles of the Pisan municipality. See Carrai, "Aspetti della letteratura," 134. Interestingly, Cristiani cites many examples of notaries, judges, and members of the *Anzianato* with the last name "Rustichelli," though none of these has been identified as Rustichello da Pisa (Cristiani, *Nobiltà*, 273-74 and 470-71).

[30] "Scrittura creative originale e autonoma, connessa e derivante dallo specifico contesto cittadino; non si producono, cioè, opere letterarie di materia pisana, in versi o in prosa segnate da originalità ideativa, riconducibili all'iniziativa personale dell'autore" see Cecilia Iannella, "Alcune riflessioni su Pisa nel trecento. Intrecci tra politica, società, cultura," in *Pisa crocevia di uomini, lingue e culture: L'età medievale: Atti del convegno, Pisa, 25-27 Ottobre 2007* (Roma: Aracne, 2007), 47.

[31] For authors writing against the advent of the Pisan municipality, Iannella gives the example of Guittone d'Arezzo who, although not Pisan, spent a great deal of time in Pisa. Guittone was known for his "polemical" writings, and in them he wanted to contrast the "old vs. the new form of political life" in Pisa. See C. Iannella, "Alcune," 56.

writing of his poli-allegorical Branor le Brun episodes.[32] But to understand why Rustichello was still in prison, we must continue the historical inquiry into Ugolino della Gherardesca.

As *podestà* of Pisa, Ugolino should have helped secure a peace treaty with Genoa and negotiate for the release of the Pisan prisoners taken at the Battle of Meloria. One would think that Ugolino would have been keen on peace negotiations with Genoa, since one of his own sons, Lotto della Gherardesca, was also taken prisoner at the battle. In February 1285, peace talks commenced but failed. Initially, the Pisan prisoners in Genoa supported Ugolino's ten-year rule over Pisa because they believed that he was the only Pisan with enough Guelph connections to free them. However, unbeknown to the Pisan prisoners, Ugolino was more concerned with strengthening his hold over Pisa and Sardinia than in freeing the Ghibelline Pisan prisoners. Ugolino's now wholly Guelph political stance did not coincide with the release of the mainly Ghibelline Pisan prisoners. Actually, it was quite convenient for Ugolino that most of the Pisan Ghibellines were now either dead or imprisoned, and he had no reason to bring his Ghibelline enemies back to Pisa because they would most certainly protest his rule. Eventually, the Pisan prisoners realized that Ugolino would not help secure their release, and they sought help from the *Anzianato* and *Popolo* of Pisa. The Pisan prisoners proceeded to play a major role in the downfall of Ugolino and the Pisan Guelph faction.[33]

Ugolino remained *podestà* and *Capitano del Popolo* until his grandson (or nephew?), Nino Visconti, demanded his share of power over Pisa and was made *Capitano* while Ugolino

[32] Cecilia Iannella also insists that any trace of Arthurian romance in this geographic area of Pisa "does not imply the inventive capacity of a [Pisan] author but only a response to the tastes of certain men," Iannella, "Alcune," 54-56.

[33] For the role of the Pisan prisoners in the downfall of Ugolino and Nino and the power they tried to yield over the Pisan government, see Cristiani, *Nobiltà*, 242.

remained *podestà*.[34] According to Dantean scholar William Vernon, Ugolino was obliged to join with Nino to win back the confidence of the Guelphs both in and outside Pisa.[35] One way Ugolino tried to raise the level of trust of the Guelphs was by expelling ten leading Ghibelline citizens from the city.[36] This act solidified his adherence to the Guelph party and convinced them where his true allegiances lay.[37] Ugolino and Nino tried to make the Pisan government more "aristocratic" and less for the *Popolo* by reducing the political importance of the Pisan guilds and also the *Anzianato* without openly going against either of them.[38] Seeking popularity among the poorer classes of society siphoned off political power within the citizenry and thus indirectly hurt the wealthy and bourgeois guilds.[39] Despite this, the long-term effect of Ugolino and Nino's government over Pisa was relatively short-lived. Much more long-lasting was the influence that these historical personae had on Rustichello da Pisa and Italian literature.

Ugolino and Nino ruled the city together for only a brief period of time. After they quarreled in 1287, Ugolino resigned his administrative position as *podestà*. Ugolino then tried to side again with the Pisan Ghibellines, but they did not trust him. In April 1288, a peace treaty with Genoa, engineered by the Pisan prisoners and the Pisan commune, was finally signed.

---

[34] This confusion in the literature and history about Ugolino and Nino comes from the Italian word "nipote," which can mean both "nephew" and "grandson."

[35] See William W. Vernon, *Readings on the Inferno of Dante Chiefly Based on the Commentary of Benvenuto da Imola*, vol. 2 (London: MacMillan, 1894), 627.

[36] Of note, there were still very few Guelphs in Pisa, and the only reason that a few Guelphs remained there was because of their strong support from both Florence and the court of Charles of Anjou. Although the Visconti family always remained staunch Guelph supporters, see Vernon, *Readings*, 627.

[37] As if his allegiance was ever in question, Ugolino had two sons who survived him. One was named "Guelfo" after his grandfather, and the other was named "Lotto." Both belonged to the Guelph party of Genoa and both were against Pisa; see Tangheroni, "La situazione," 99.

[38] Ugolino also controlled all the new statutes put into law by the guilds and corporations in Pisa, which previously had been the prerogative of the *Anziani*. They did this by limiting new guilds from entering into any newly formed confraternities or associations; see Cristiani, *Nobiltà*, 241-42. Furthermore, Alma Poloni also notes that although the entire governmental power structure of Pisa had aristocratic leanings, the nobles were still excluded as much as possible from the actual administration of the city. See Poloni, *Trasformazioni*, 380

[39] Dante in some ways misrepresents Ugolino della Gherardesca as overly tyrannical in his rule of Pisa. Dante is most likely condemning Ugolino in the *Inferno* because of his aristocratic attitude to enrich his own power and wealth and his lack of support for the citizenry.

However, Ugolino and Nino were not in accordance with this treaty because it threatened their interests in Sardinia. They only approved the treaty in order to avoid angering the Pisan *Popolo*. After the peace treaty was signed (and most likely in defiance of it), Ugolino and Nino allowed Sardinian privateers to rob Genoese merchant ships, even though acts of piracy were forbidden by the treaty. This treacherous act voided the peace treaty with Genoa and nullified the release of the Pisan prisoners. The embittered Pisan prisoners asked the Pisan municipality to force Ugolino and Nino to respect the peace treaty, and Ugolino and Nino lost the support of the Pisan municipality. Nonetheless, Pisa was leery of openly going against Ugolino and Nino because they had powerful Guelph friends and allies. On the other hand, Ugolino and Nino were also leery of going against Pisa, since they were greatly outnumbered and their Guelph supporters were far away. Hence Ugolino and Nino could not openly defy the Pisan municipality for fear of reprisals against their families and properties, and Pisa could not go against Ugolino and Nino because they were afraid of their Guelph supporters. Hence, with no peace treaty with Genoa, the Pisan prisoners remained in jail.

Besides Pisa's many problems with Ugolino and Nino, there were also food shortages, riots, lack of men in the workforce, and outbreaks of disease.[40] Hatred of Ugolino increased when he profited from Pisan misfortunes. Ugolino had a surplus of grain stores, yet he allowed his fellow Pisans to die of hunger because they could not pay the exorbitant prices he charged for his grain.[41] A man who would allow his own people to starve to death and at the same time profit from the scarcities in the city could no longer be tolerated. Since both Ugolino and Nino took such a cavalier attitude toward any lasting peace with Genoa, and because neither of them

[40] Herlihy points out that exacerbating the problems in Pisa after the Battle of Meloria was, according to, Salimbene, "a pestilence which decimated the city." This was not the Black Plague, but probably malaria (Herlihy, *Pisa*, 47-49).
[41] Ugolino's withholding grain from the Pisans is related by his contemporary, the Pseudo-Brunetto Latini; Ibid., 109.

seemed at all concerned about the general well-being of the Pisan populace, the only solution was to oust Ugolino and Nino from Pisa.

After the grain fiasco, Ugolino must have sensed the growing animosity toward him in Pisa, and he tried cozying up to the staunch Ghibelline Archbishop of Pisa, Ruggero degli Ubaldini, (also known as "Ruggieri"). But Ruggieri, unbeknown to Ugolino, was secretly negotiating with the Pisan prisoners. The Pisan prisoners supported Ruggieri because he would respect a peace treaty with Genoa and finally secure their release.[42] At last, the plan to expel Nino and Ugolino from Pisa was set in motion, but then Nino decided to side with the incarcerated Pisans alongside Ruggieri. Historian Emilio Cristiani gives little credence to Nino's actual concern for the Pisan prisoners, saying that Nino only wanted a peace treaty to "confuse and destroy" Count Ugolino.[43] Nino (who was from a notoriously Guelph family) to side with a prominent Ghibelline clergyman is an indication of his desperation to get rid of his grandfather Ugolino and secure his own safety and property in Pisan territory.

Ruggieri, much like Ugolino and Nino, regularly changed allegiances. Originally he sided with Ugolino, then with Nino, and then again with Ugolino.[44] Nonetheless, his loyalty was always to the Ghibelline cause and not to Ugolino *or* Nino. The city of Genoa was aware of the discussions between their prisoners and Ruggieri, but it refused to enter into the regional politics

---

[42] The Pisan prisoners chose Count Bonifazio Donoratico della Gherardesca to represent their cause against Nino and Ugolino in talks with Ruggieri. During the Battle of Meloria, Fazio Donoratico was Captain of War for the Pisans in Sardinia. He was captured by the Genoese and spent the next fifteen years in prison in Genoa; see Cristiani, *Nobilta*, 246. Furthermore, Bonifazio was related to Ugolino, although his branch of the della Gherardesca always sided with the Ghibellines. He was not freed from prison in Genoa until the general amnesty of 1299, and after that he held prominent roles in the Pisan government; see Maria Luisa Ceccarelli Lemut, "Della Gherardesca, Bonifazio," in *Dizionario Biografico degli Italiani*, vol. 37 (1989), http://www.treccani.it/enciclopedia/bonifazio-della-gherardesca_(Dizionario-Biografico)/

[43] See Cristiani, *Nobiltà*, 243.

[44] It is difficult to make Ruggieri's, Ugolino's, or Nino's allegiance to the Guelph or Ghibelline party a *tout court* affair. Generally speaking, Ruggieri always sided with the Ghibellines, and Nino and Ugolino with the Guelphs. However, all of these men sided where it was most convenient and where they could reap the most benefits or benefices.

of Pisa. However, Genoa did fear attacks from Ugolino and Nino, so it sent three ships to the Port of Pisa to squelch any acts of piracy and to protect its trade ships. With Ugolino's consent, Ruggieri rebelled against Nino, but Nino had prudently already left the city in June 1288.[45] Nino never again set foot in Pisan territory, and soon after he became a citizen of Genoa.[46]

After Nino was out of Pisa and Pisan politics, Ruggieri could now concentrate on eliminating Ugolino. In July 1288, Ugolino re-entered Pisa, but it is perplexing why he would return to a city where he had so many enemies. It is possible that Ugolino wanted to reclaim the *podestà* and lordship over Pisa without the encumbrance of Nino; it is also possible that Ruggieri gave Ugolino the false hope that he had the support of the Pisan Ghibellines. When Ugolino returned to Pisa, there were riots throughout the city due to the food shortages. There were also skirmishes between Ugolino's and Ruggieri's men, and in these skirmishes an illegitimate son and one of Ugolino's grandsons were killed. Ruggieri captured Ugolino, two of his sons, and three of his grandsons and threw them in the Muda Tower.[47] In March 1289, Ugolino's friends and family could no longer pay the ransom on the heads of Ugolino and his male heirs, and they were left to die of starvation.[48] Archbishop Ruggieri then had the keys of the Muda Tower thrown into the Arno River. Ugolino, his sons, and his grandsons all starved to death without receiving confession, as famously described in Canto 33 of Dante's *Inferno*.

---

[45] See Cristiani, *Nobiltà*, 247 for Ruggieri's rebellion against Nino.

[46] For a brief history of Nino after he fled from Pisa, see Ceccarelli Lemut's "I Pisani prigionieri," 86. Ugolino died in Pisa in 1289 (69 years old), Ruggieri degli Ubaldini died in 1295 in Viterbo (probably around 70 years old although there is no record of his birth), and Nino Visconti died in 1296 in Gallura (31 years old).

[47] Ugolino was captured with his sons Gherardo and Uguccione and his grandsons Nino il Brigata (Guelfo's son) and Anselmuccio (Lotto's son). Ugolino's great-grandson Guelfuccio was also captured, but since he was only a small child, he was not killed and lived the next 25 years in prison; see Ceccarelli Lemut, *Il conte Ugolino Della Gherardesca*: *un episodio della storia di Pisa alla fine del Duecento*, discussion given in Pisa, August 6th, 1982, for the Associazione degli Amici di Pisa, in *Dizionario Biografico degli Italiani*, vol. 37 (1989), 1, 6-18, http://www.treccani.it/enciclopedia/ugolino-della-gherardesca_%28Dizionario-Biografico%29/

[48] If the family and friends of medieval prisoners could no longer afford their maintenance, these prisoners were left to starve or die of thirst. Since Ugolino's property had been seized by the Pisan government and because he had few friends left in the city, he had no way of securing the funds necessary to pay the ransom on his and his male heirs' heads.

Ruggieri had a central role in the period of transition and the reestablishment of the Pisan Ghibelline government after the fall of Ugolino and Nino.[49] Ruggieri was interim leader of Pisa for two months, but he could not stay in office due to the many threats he received from the powerful Visconti family. He was replaced by Gualtieri da Brunforte in December 1288. Brunforte was the first official *podestà* of Pisa after the downfall of Ugolino and Nino. Brunforte or "strong" (*forte*) man from the "Brun" family resembles the invincible knight Branor le Brun, the hero of the original episodes in Rustichello's *Compilation*. Ruggieri stayed active in the Pisan government until the installation of Guido da Montefeltro as *podestà* in November 1289. Unfortunately, due to political upheavals in Pisa in the late 1280s, the release of the Pisan prisoners in Genoa was once again delayed.

The 1290s was the start of a new day for Pisa, with redistribution of governmental power and talks with Genoa finally recommenced. These talks were slow, and prisoner exchanges between Pisa and Genoa did not start again until 1295. At this time, 173 Genoese were released from Pisa, and 200 Pisan prisoners were released from Genoa.[50] With the Pisan prisoners returning, the citizenry was restored, and the power of the *Anziani* was stabilized. But it was not until July 1299 that there was a general amnesty between Genoa and Pisa which freed the remaining prisoners from the Battle of Meloria, including Rustichello da Pisa.[51] It took over fourteen years of regime changes, wars, political intrigues, and dashed hopes, but all the Pisan prisoners could finally return home.

***

[49] Poloni, *Trasformazioni*, 162-63.

[50] For more information on the prisoner exchanges between Pisa and Genoa, see Ceccarelli Lemut, "I Pisani prigionieri," 83.

[51] An estimated 1,000 men were freed, but Ceccarelli Lemut believes this number to be far higher, Ibid., 79.

Medieval historian Josef Macek believed that nationalistic sentiments were much stronger for writers who were far from their homelands.[52] He elaborated that these displaced authors often wrote of fantastical or ideal native lands that in reality did not exist.[53] Rustichello da Pisa, exiled far from home, probably imagined an idyllic homeland but even more so, idealistic men to lead it. Rustichello and the Ghibelline prisoners in Genoa wanted men to lead Pisa who did not lead solely for personal or political gain, but instead for the good of the Pisan citizenry. Hence, Rustichello, through the character of Branor le Brun, seems to be calling for a new leader who epitomizes everything that Ugolino and Nino were not. Pisa needed a brave, strong, chivalrous, magnanimous, and compassionate leader, much like the invented knight Branor le Brun. Branor upholds the ideas and ideals of a distant but glorious past that Pisa needed to remember and try to reclaim.

To determine whether or not Rustichello repurposed portions of his earlier romance as a political allegory on the Guelf-Ghibelline struggles of late thirteenth-century Pisa, it is crucial to explore the Branor le Brun episodes of the *Compilation* at greater length. This inquiry will provide a springboard to a New Historicist or "local" reading of the Branor episodes. With these episodes, Rustichello mobilized his own contribution to Arthurian legend (originally conceived as an *homage* to Edward I), and developed them into a crypto-commentary on the Pisan municipality at this critical stage of its formation. Now that the historical context of Pisa and Rustichello has been established, we can now take a closer look at the political and allegorical messages found hidden in the *Compilation* especially through the role of women.

---

[52] See Josef Macek, "Gli intellettuali," 396-97.
[53] Ibid, 396-97.

BRANOR LE BRUN AND THE POLITICAL ALLEGORY IN THE *COMPILATION*[54]

I read the Rustichello da Pisa original episodes of Branor le Brun topically through the lens of the then-current political situation of the city of Pisa and the consequences this had for a large group of Ghibelline Pisans. I concentrate on the previously mentioned historical events that landed Rustichello in prison for over fourteen years. He used these events to infuse a subtle allegory into his Arthurian *Compilation* as a form of political protest. I point out that through the character of Branor, Rustichello voiced his own concerns, suggestions, and observations on the politics of his day. More specifically, I surmise that Rustichello was trying to offer a veiled commentary on his situation in the Genoese prisons after the Battle of Meloria through these episodes.

Despite their imprisonment, the Pisan prisoners in Genoa still held great political sway in their hometown, and some of the captured men were writers who composed a variety of works from their cells.[55] Hence, if the Branor le Brun episodes are a political allegory, they must have been completed a couple of years *after* the Battle of Meloria (1284), and most likely in the period of Ugolino and Nino's deposing (1288).[56] It seems Rustichello started writing the Branor episodes (those after Episode 16) when it became apparent that Ugolino and Nino did not plan on

---

[54] In Appendix 1, I give my translation in English of the Branor le Brun episodes. But since I concentrate specifically on the Branor episodes, here is a brief summary of all the Branor episodes in the *Compilation*:
Episode 1: Introduction to the work.
Episodes 2-16: Branor jousting Knights of Round Table at Camelot and King Arthur.
Episodes 17-26: Branor helps the Maiden of Listinois.
Episodes 27-29: Branor fights against the evil knight Sadoc and 20 of Sadoc's men.
Episodes 30-34: Branor fights Karacados for a maiden that Karacados has kidnapped.
Episodes 35-37: Branor helps a captured knight and his wife.
Episodes 38-39: Branor returns home, sends a letter to King Arthur, and dies.

[55] See Ceccarelli Lemut, "I Pisani prigionieri," 78, Cigni, "Copisti prigionieri," 425-39, and Meneghetti, *Scrivere in carcere*, 185-99.

[56] Cigni seems to think that Rustichello da Pisa did write the *Compilation* as it is known in starts and stops. However, as I learned in meetings with him (June 4th and 24th, 2015), he thinks that the entirety of the Branor episodes was probably written *before* Rustichello was imprisoned in Genoa. He believes that Rustichello then proceeded to add his redaction of the Tristan episodes. Cigni has yet to publish this new hypothesis, which differs from my own ideas on the evolution of the *Compilation* of Rustichello da Pisa.

negotiating lasting peace terms with Genoa. Rustichello made Branor a political spokesperson, and with these episodes, he appeals for a new leader who would represent the traditional form of government found in the *Anziani* and currently suppressed by Ugolino and Nino. Rustichello could also in a sense be campaigning for the best candidate for the leadership of the city, and for him this was a certain Gualtieri Brunforte (whose name has assonance with Branor le Brun). Thus, Rustichello made his Arthurian Knight Branor le Brun a piece of political propaganda so that he and his fellow prisoners, through a veiled political allegory, could nominate a new candidate to lead Pisa. Rustichello could not overstate the political preferences of the Ghibelline prisoners because if he did, all of the Ghibelline families in Pisa risked reprisals from Ugolino, Nino, and their Guelph supporters. Furthermore, through past experience, Rustichello and the other Pisan prisoners knew that their captor host Genoa did not want to be involved in the regional conflicts of Pisa. Hence, to protect his jailers, but more importantly to protect his fellow Pisan Ghibelline prisoners and their families in Pisa from harm inflicted upon them by the Guelphs, Rustichello had to keep his political allegory "veiled." To this end, Rustichello's political allegory was an Arthurian romance, which was generally a medium for entertainment rather than political protest, so no one would suspect the true motive of the Branor le Brun episodes: a revolt against the Guelph government of Ugolino and Nino.

***

I begin by focusing on some salient points of the Branor le Brun episodes in Rustichello's *Compilation.* Rustichello opens his work to all potential readers, requesting a broad audience regardless of social class, place of origin, or honorific title. Although Rustichello's audience was probably from the wealthy aristocratic or bourgeois classes, he wanted all men to read his text or have it read to them. Rustichello states:

> *Seigneur, enperaor et rois, et princes et dux, et quenz et baronz, civalier et vauvasor et borgiois, et tous le preudome de ce monde que avés talenz de delitier voz en romainz.*[57]
>
> (Lords, emperors and kings, and princes and dukes, and counts and barons, knights, vavasours and townspeople, and all noblemen of this world who want to delight in romances.)[58]

The social and political emphasis in this introduction is striking in its inclusiveness. Rustichello opens his romance to all the townspeople or the "borgiois," and also to "all the noblemen" (*tous le preudome*).[59] Although Pisa had ancient families in the "noble class," class divisions in Pisan society were constantly being blurred as "new men" rose through the ranks of the bourgeois and entered the aristocratic class, even though they were not considered "noble." Furthermore, since Pisa—and Italy, for that matter—did not have a monarchical society, there were no kings, princes, or emperors, except the foreign invaders who claimed these titles for themselves as they vied for power in Italy.[60]

The hero of Rustichello's original episodes, Branor le Brun, has no title(s). He is not a king, prince, duke, count, or baron, yet he is better than all the "nobles" that he fights. Furthermore, he bests all the knights from the "noble" class because it seems that his "nobility" is found through his chivalrous deeds and feats of arms, and not in his titles. Moreover, throughout the Branor episodes, we do not even learn Branor's name, although it and his

---

[57] *Il Romanzo,* 1:1.

[58] I have not come across a similar introduction in the works of other romance writers. Other romance works usually start the story immediately or thank a patron. Although later in the introduction Rustichello does say that he obtained the stories in his *Compilation* from a book in King Edward of England's collection, I resist further Edwardian connections. Rustichello never thanks Edward I for his books, or the opportunity to write a romance work for him.

[59] *Il Romanzo,* 1:1.

[60] Case in point: the previously discussed Hohenstaufen dynasty claimed rights to southern Italy and Sicily. After their defeat, the Hohenstaufen were followed by the French Count Charles of Anjou, who later became the "King of Sicily."

condition in life are repeatedly asked of him. He remains the *bel inconnu* until his very last episode (Episode 39) to build up the suspense and create the most dramatic climax. The revelation of Branor's name could have also been delayed because Rustichello did not yet have a name picked out for his invented knight. That is to say, in the initial phase of the writing of the *Compilation,* Rustichello wanted the reader to think that he was describing Edward. However, Rustichello then added the humorous element of making Branor extremely old to distance his character from his initial inspiration, Edward I.[61] Finally, the withholding of Branor's name adds to the mystery of his episodes and spurs the reader on to discover who this formidable knight is.

When Branor arrives at Camelot, he is already fairly certain of his invincibility and status as "the best knight in the world," but he is not completely sure. He sends his manservant to challenge all the Knights of the Round Table, but this is essentially a fool's errand. Branor's valet seems to be aware of the impossibility for the newer generation of knights or Knights of the Round Table to be victorious, and he boasts that no one can beat his lord and master. Branor's manservant says: "But he [Branor le Brun] also informs you that there are not enough knights here to unhorse him; and this is what my Lord sends me to tell you" (*Mais si vos fais savoir, qu'il ne a chaienz tant des chevaliers que a la terre le peüssent mettre; et ce est ce que mon seingnor vos mande*).[62] Then why does Branor go to Camelot to challenge all the Knights of the Round Table if he is invincible?

The premise of Branor going to Camelot hinges on his real or perceived invincibility. Branor knows he can probably win yet he is unsure of his prowess. When Branor jousts the Knights of the Round Table, he always asks their name and states that he has heard tell of all the knights that he jousts. Nonetheless, no one at Camelot can ascertain where Branor comes from or

[61] The comedic value of Branor's extreme old age is later seized upon in the Greek poem based on the Branor le Brun episodes, which will be discussed later in this chapter.
[62] *Il Romanzo,* 4:6.

who he is. If a man is truly renowned, he is remembered and talked about and has a legacy attached to his name, even when he has died. Unfortunately for Branor, this is not the case, and no one recalls him or his great feats of arms. Branor le Brun must have a name to be remembered, and he promises King Arthur and the Knights of the Round Table that they will soon know it (*je vos firai savoir tot mon estre, et ne passera gramant de tens*).[63] Branor assures a legacy for himself and the Le Brun family when King Arthur's adventures are written down. However, since Branor's name is not known, King Arthur instructs that it is to be left blank (*Et li roi fist venir un clerges, et fist mettre en ecrit tot l'affer de ceste aventure de chief en chief. Mes le nom dou chevalier ne dit il pas, por ce qui'il ne le savoient mie*).[64] Hence, Branor le Brun will be remembered, and he will also preserve a legacy for himself and the Le Brun clan because King Arthur assures this through the recording of his episodes.

Branor is referred to in the text only as the "Old Knight" until his last episodes. With the exception of the rubrics in the manuscript that label Branor as such, the reader has no idea of his identity or why he is considered so very old. In Episode 15, Branor tells King Arthur, "Sire King Arthur, you should know truly that it is more than forty years since I have borne arms. . . " ('*Sire roi Artus, sachiez de voir qu'il a plus de quaranz anz que je ne portai armes. . .*).[65] Then he states that he has *"*been living a very solitary life. . ." *(mais ai demorés mout en repoust)*.[66] Lastly, he says that he is now more than 120 years old *('et si sachiez que je ai passez plus de cent vins anz d'ages'*).[67] Because Branor mentions that he has not jousted for over forty years and that he is over 120 years old, the people at the court at Camelot should know that he belongs to the

[63] *Il Romanzo,* 15:14.
[64] Ibid., 16:16-17.
[65] Ibid., 15:1.
[66] Ibid.
[67] Ibid.

older generation of knights. However, since Branor was jousting before most of the Round Table Knights were born—i.e., forty years ago—it is now understandable why no one remembers him. Someone in the court should have been able to figure out who Branor is because few of the Old Table Knights (if any) were still alive. Moreover, probably few Old Table Knight could have lived to the ripe old age of 120 years and still be as formidable as Branor on the jousting field. Branor says he has "been living a very solitary life," and this could mean that he was out of the public eye. This absence from court could also explain why the Knights at Camelot do not know that he was still alive. Nonetheless, the reader is left questioning: Who is Branor le Brun?

Branor gives a few more clues about his condition, ancestry, and adherence to the "Old Table" Knights when he insinuates that he once knew Hector le Brun, Galehot le Brun, and perhaps even the legendary Febus. These ancient knights, according to Branor, could easily have beaten all the Knights of the Round Table, just as he does. Branor states:

> *. . . que je connuit jadis tiel deus chevaliers, qui trepassés sunt ansienement, que tuit li chevaliers que sunt en votre hostiaus a cestui point, por coi il fussent jusque en ducenz, il les avront tuit mis a la terre les uns après les autres. Et si vos nomerai ci li quelz furent ceaus deus: li un fu mesire Ector le Brun, cestui fu li ainznés, et cestui fu bien parfeit chevalier et puissant et preudomes, le plus que fust a son tenz eu monde. Les autres fu Galeot li Brun, que fu fiz de m Ettor; voiremant cestui san faille fu bien chevalier de grant valorz, bien le meillor de toz le seicle a son tenz. Des autres assés ne voz di je, que furent des plus noviaus et des plus ansienz, comant fu Febus, que de haute chevalerie passé tot li monde.*

(. . . a long time ago I knew two knights, who died long ago, who would have unhorsed, one after the other, all the knights of your court, even if there were two hundred of them. And I want to tell you the names of these two: one, the older of the two, was Lord Hector le Brun, a more accomplished, strong and valorous knight than any other in his time. The other was Galehot le Brun, son of Lord Hector; truly he was, without a doubt, a knight of great valor, certainly the best in the world in his time. Of the others I will not speak; there were those younger and those older, like Febus, who was superior to everyone in the perfection of chivalry.)[68]

Branor only mentions knights from *his* family line of "Le Brun," he does not mention other knights of the previous generation who also fought alongside Uther Pendragon. He does this to give the reader, and also the Knights of Camelot, yet another opportunity to guess his identity. Branor indicates that his ancestors were the best in the world and upheld the "perfection of chivalry."[69] Likewise, as Branor has just proven, he too is the best knight in the world and the epitome of chivalry, since he bested all the Knights of the Round Table despite his great age.

Although Branor remains a mystery and an unnamed knight until the end of his episodes, the reader realizes that in addition to his advanced age, this character is also unusually large and strong. Rustichello gives us some indication of Branor's great size: "his body was so big and powerful that he could almost have been considered a giant" (*mout grant de son cors que sachiez qu'il estoir si corsus que por ne fait qu'il n'estoit jeant*). But since the reader has no basis for comparison, one can only assume that he is much bigger than all the Round Table Knights.[70] No

[68] *Il Romanzo,* 15:4-7.
[69] Ibid., 15:7.
[70] Ibid., 3:5.

one at Camelot comments on Branor's great size in his initial episodes; this is perhaps because Branor never dismounts from his horse. The Round Table Knights comment only on Branor's prowess but never on his large size. After jousting with twenty-nine knights and defeating them all, Branor gives his shield to his squire, and Rustichello gives the reader another indication of Branor's giant-like size. Branor's shield "was half again as large as the shields of the other knights" (*que bien estoit de la moitié greingnor que ceaus des autres chevaliers*).[71] That is to say, Branor's shield is one-and-a-half times bigger than the shields used by the Knights of the Round Table. Hence, the reader can infer that Branor is a quasi-giant, at least compared to the Knights of the Round Table or rather, the "New" Table Knights. The supposition that the Old Table Knights are bigger and stronger that the New Table Knights is found first in Italy in Rustichello's Branor le Brun episodes. Likewise, the pitting of "New" or Round Table Knights against "Old" Table Knights happens first in Rustichello's *Compilation*, and hence also first in Italy. Philologist Francesca Rizzo Nervo points out, "the motive for the distinction between the Old and New Table is not peculiar in Arthurian literature, but it is further developed in re-elaborations in Italy."[72] Since Rustichello is the first known author of Italian Arthurian prose romance, it was he who started the trend of pitting Old against New Table Knights in the romance tradition here. When Rustichello combined tales of the Old and the New Table of Knights, he brought something new to Italy. These tables were of course known and read about, but they were kept separate. The Old Table Knights do not fight or joust with the New Table Knights because they have long since died, and so they obviously cannot interact with the newer generation of knights. Inserting the original character of Branor le Brun allows Rustichello to

[71] *Il Romanzo,* 14:17.
[72] Francesca Rizzo Nervo, *Il Vecchio Cavaliere* (Soveria Mannelli (Catanzaro): Rubbettino, 2000), 117.

bridge the gap between the two usually separate tables, and by comparing and contrasting them, determine which table is superior.

Rustichello's siding of the Old Table Knights over the Round Table Knights is a sign of his political leanings. That is to say, Rustichello supports a previous form of government and leadership that upholds the traditions and values of old, just as Branor le Brun does. Since the Guelph faction of Ugolino and Nino were currently in power in Pisa, an "old" government or governing body would have been the previously Ghibelline-controlled government. In the *Compilation*, it is evident that Rustichello prefers the older forms of leadership because he makes Branor le Brun, the Old Knight, larger, stronger, and indomitable, whereas the Round Table Knights are weak and ineffectual against him. But Branor represents not only the individual but also a political system; although he never verbally belittles his smaller, younger, and weaker New Table adversaries, there is a precedent for doing so in his family of "Le Brun."[73]

In a work titled the *Palamède* (*ca.* 1230-40), written almost fifty years before the *Compilation*, a precedent is set for Branor's ancestors verbally confronting knights from the newer generation, and also for the Le Brun men living out their days in relative obscurity. Rustichello could have taken from the *Palamède* the idea of Branor le Brun confronting New Table Knights and essentially living in voluntary exile away from Camelot.[74] In the *Palamède*, a knight named Brehus sans Pitié discovers a tomb in a cavern. This cave is the legendary tomb of the "Le Brun" family, where Brehus talks to the very old, but still living grandfather of Guiron le Courtois. This unnamed old knight lives in the *Cave des Bruns* with his brothers and sons (one of

[73] There are also references to knights with the last name "Brun" in Chrétien's *Eric and Enide,* and the later continuations of the *Perceval.* However, none of the "Brun" clan in Chrétien performs the amazing deeds of Rustichello's Branor le Brun or share his history (see G.D. West, *An Index of Proper Names in French Arthurian Verse Romances, 1150-1300* (Toronto: University of Toronto Press, 1969), 28-29.

[74] A portion of this the work is also known as the *Guiron le Courtois.* See fn. 44 and 45 of the introduction to this dissertation.

whom is the father of Guiron). This cave-tomb holds the graves of all the famous "Le Brun" men, the most important of whom is the renowned and gigantic Febus. This old man explains to Brehus why he, his brothers, and his sons have decided to live out their days in the tomb and also why the knights of the newer generation will never be as great as the Old Table Knights. The old man explains, "because knights that are as small as you are, can never do great things even though you might have a great need [to do so]" (*car chevalier qui est si petis, com vous etes, ne porroit, ce m'est avis, feire trop grant feit, puis que ce vendroit au grant besoing*).[75] Although Branor le Brun never intentionally insults his Round Table adversaries, he does in a sense belittle them through his actions, which serve a two-fold purpose in the *Compilation*. Branor's didactic purpose is to demonstrate to the Round Table Knights that they are not invincible. He is an annoying and humbling reminder to them that there will always be someone bigger, stronger, and better than they are. It seems that his intention is to put the younger generation of knights in their place and to shrink their egos down to size. The poli-allegorical purpose of this dichotomy is to comment on the traditional Ghibelline party as opposed to the newly empowered Guelph party in Pisa. Rustichello uses the Old Table Knight Branor le Brun to represent the longstanding Ghibelline party in Pisa versus the now dominant Guelph party represented by the Round Table Knights. The political interpretation here could be a reminder to the Pisan Guelphs that although the Ghibelline party seems old and at times dormant, it is very much alive and still a political giant in Pisa.

The men of the Le Brun family are notoriously large, strong, longevous, and invincible. Everyone at the court in Camelot is in awe of Branor's great strength and valor as a knight, and they have difficulty understanding how he achieves these superhuman feats of arms. King Arthur

[75] A. Limentani, *Dal roman*, 65-66.

thinks that Branor is perhaps a "ghost" or a "magic spell" (*fentesmes ou enchantemant*).[76] If he were a magical apparition, this would explain Branor's supernatural strength and how he can so easily defeat the best knights in the world. But it does not, and so King Arthur and the Knights of the Round Table question whether or not Branor is a "mortal man" or "*chevalier terreine*."[77] In the end, they all agree that he is the best and most valiant knight they have ever seen (*vos est tot li meillor chevalier et li plus poissant que nos veisimes en tot nostre vivant*), although they are not entirely sure about his mortality.[78] Their doubt probably stems from the fact that Branor is the only knight they have met from the Old Table of Uther Pendragon who is still alive.

At one time Branor was best friends with Uther Pendragon, and he also did more for him than for any other knight. Because Branor loved Uther, he by extension also loves his son, King Arthur, telling him: "Know truly that I was a great friend of your father, King Uther Pendragon, and that I did more for him than any other knight of his court; and for love of your father I feel great love also toward you" (*Car sachiez de voir que je fui grant amiz dou roi Huter Pendragon votre pere, et si fis jadis plus pour lui que pour nul autre chevalier de son ostel; et pour l'amour de votre père, voz di je que je aime assez vos*).[79] Although Arthur rather petulantly complains that Branor's sole purpose for coming to Camelot is to bring "shame" and "dishonor" or ("honte" and "desnor") on Arthur and all his knights, Branor assures him that this was not his intention.[80] Nonetheless, Arthur is not swayed by Branor's entreaties because he will not give his name or

[76] *Il Romanzo*,12:11.
[77] Ibid., 16:8.
[78] Ibid., 15:8.
[79] Ibid., 12:17.
[80] Ibid., 12:20-24.

condition in life.[81] After the episodes at Camelot, Rustichello's political allegory becomes more apparent through the role of women.

The ladies in the Branor le Brun episodes represent a suspended allegory for the city of Pisa, and their role, although essential, is at the same time puzzling. Women are usually present in the Branor episodes and are necessary to propel the action of the romance. Nonetheless, once the "action" of the episode starts, they vanish.[82] That is to say, women serve as catalysts for the action pursued by men (as they frequently do in romance), but once the action starts, the ladies fade into the background. Women are forgotten when the men start fighting amongst themselves, and the extended allegory of women representing the city of Pisa could likewise mean that the city is often forgotten once men such as Ugolino and Nino put their own agendas over a helpless city. Furthermore, Pisa is the catalyst for the political actions of men, just as women are the catalyst for the martial actions of the knights in the *Compilation*.

When Branor arrives at Camelot, he is accompanied by an "exquisitely dressed" or "*richemant estoit ahornez*" lady.[83] This lady is "one of the most beautiful women in the world" (*est bien des plus bielle dame dou monde*), and Rustichello takes great pains in describing her clothes, jewels, and crown.[84] She is so beautiful that "she did not seem like a mortal woman, but a spiritual creature" (*elle ne sembloit pas dame mortiaus mais chouses espiritiaus*), but the lady never speaks.[85] She is the prize for whichever knight can successfully defeat Branor in a joust, and she is the catalyst for the jousts. The first knight who wants to joust with Branor is

---

[81] Arthur acting foolish or petulant, though more common in French Arthurian literature, also occurs in English Arthurian literature, as in the case of Arthur in *Gawain and the Green Knight.* See Chapter 2 of this dissertation, fn. 107.

[82] Ladies are always present in the Branor le Brun episodes, with the exception of Episodes 27-29 when Branor fights Sadoc.

[83] *Il Romanzo*, 4:10.

[84] Ibid., 4:5.

[85] Ibid., 3:7.

Palamedes, who also happens to love ladies. Palamedes tells of his love of women when he asks King Arthur to joust first (*Monseingnor roi, je vos di que je aime mout bielle dames*).[86] Hence, it is a beautiful lady (Pisa) who gives Branor (Republican system) the excuse to set the parameters for all his future jousts at Camelot, and these consist of Branor remaining "quintain" while his opponents try to unhorse him to win his lady.[87] Branor stays immovable while his adversaries try to topple him from his horse, just as the older governmental system of Pisa is steadfast even though men (Pisan Guelphs) try to uproot it. Thus, women and Pisa are used as a pretext for fighting, even though they do not actively participate in the action of these episodes. Nonetheless, nothing would ever happen in the *Compilation* if women did not give men an excuse to joust.

When Branor jousts with the great Tristan, he states that he would willingly bow out of this joust, but cannot because the Lady with whom he is traveling essential forces him to joust. Branor tells Tristan:

> *Et vos di voiremant que je refusast voluntierz la jostes de voz, pour le grant bien que l'en dit par tot le monde de vos. Mes ma dame qui la est, a cui je sui, mez ha defendus que je ne refuse jostes de nul chevalier de la meison li roi Artus. Mais je firai tant por le amor de l'aute chevalerie que vos avés en voz; vos firai je tant d'onor que je prendrai mon glaivies.*[88]

---

[86] *Il Romanzo*, 4:11.

[87] "Quintain" was "a dummy used for jousting practice originally consisting simply of a shield set up on a post, but later was mechanized with an arm designed to fell the charging horseman if he did not land his blow properly" (Kibler, *Chrétien de Troyes*, 503), fn. 67 of Chapter 2 of this dissertation.

[88] *Il Romanzo*, 7:10-12.

(And I tell you truly that I would willingly refuse to joust with you, because of all the good things everyone says about you. But my lady over there, whose servant I am, forbade me to refuse to joust with anyone from King Arthur's household. However, for the respect I have for your high valor as a knight, I will do you the honor of taking my lance.)

Branor acknowledges later in his episodes that he has been living a very "solitary" life, but if he has heard about the feats of arms of the Round Table Knights, it was not a life in complete seclusion. If Branor represents an older form of Pisan government, it would have been the past Ghibelline one and not the then-current Guelph government of Ugolino and Nino. Likewise, since most of the Ghibellines in Pisa were dead or exiled from the city, and the rest of the Pisan Ghibellines were prisoners in Genoa, they were all in a sense "secluded." Nonetheless, all the scattered Pisan Ghibellines were still able to receive news about the deeds of the "new" knights or men ruling their city. Furthermore, it is the lady whom Branor serves who forces him out of his solitary life, and if the "lady" is a metaphor for Pisa, it was the city who forced the various Pisan Ghibellines out of the passiveness of their solitude.

When all the Round Table Knights have been defeated, finally King Arthur must also joust or he will appear a coward, since the "greats" of the Round Table such as Palamedes, Tristan, and Lancelot have already been defeated by Branor. Branor once again says that he would prefer not to joust King Arthur, but that he is "forced" to do so by the vow he made to his lady: "And I would gladly refuse to joust against you if I could, and I would tender you my sword. But, may God help me and judge me kindly on that blessed day, in truth I cannot; nonetheless, know that I will joust with you against my will" (*Et voluntierz refusastes la joste de*

vos se je peüsse, et vos rendisse mon espee. Mais si voi[r]emant m'aü Dex, et me done bone sentence le jor beneoit, comant je ne puis, mais josterai a voz contre ma voluntez).[89] But should we pity Branor? Can we believe he is fighting against his will? It seems not when he later divulges that his real motive for jousting is to test the valor of the Old Table Knights against that of the New or Round Table Knights. According to both Chrétien and Llull, a good knight should always help the defenseless (as previously noted in Chapter 2), and Pisa was defenseless after the devastating loss at the Battle of Meloria. The Pisans thought they had elected such a man when Ugolino was made *podestà* for ten years. However, it soon became apparent that he was only interested in enriching himself and his own power rather than the well-being of Pisa. Pisa needed a strong leader who would help all Pisans, and Rustichello responded to this need by infusing a political allegory in the Branor le Brun episodes. This political allegory becomes especially apparent in the episodes of the Maiden of Listinois (Episodes 17-26).

The Maiden of Listinois episodes have a different tone than previous episodes where Branor jousts the Knights of the Round Table. At Camelot, although Branor says he is jousting because his lady is forcing him, we later learn that he is jousting to test the mettle of the knights of the newer generation. After Branor defeats an endless and almost mechanical succession of Round Table Knights, he meets the Maiden of Listinois and finally shows some depth of emotion. The Maiden is the first woman character to speak to Branor, and when she does, she begs him to come to the aid of her and her mother, who are being besieged by an evil count named Guiot. She asks Branor to pity her and her aged mother's plight (*Ha, franc chevalier et jentilz, aiés pitié de moi et d'une moie mere que de mout grant ages est, et mettés conseill en*

[89] *Il Romanzo*, 12:18-19.

mon affer!).[90] Branor feels so much compassion for her that he almost bursts into tears (*quant il entent ensi paller le damaiselle il n'a si grant pitié que lermes li venoient as ieaus*), and swears he will help her.[91] After speaking with the Maiden of Listinois, Branor le Brun makes a conscious change, and the tone of his episodes changes accordingly. Branor is no longer proving his own prowess but helping others in need throughout his remaining episodes (Episodes 17-39). Here Branor acknowledges that his purpose has changed, and now he will fight to defend the weak instead of jousting to confirm his own martial valor *(Mais quant je regart a votre affere que estes a si grant meschief et si desconsiliés, me fait ensi le quer changier que je vos di que je sui celui que mon cuer osterai de ce qu'il s'avoit propensee, et me vuoill travaillier de votre beiçonge*).[92] Likewise, I believe that here Rustichello is stating that his purpose in writing has also changed. Rustichello will now write to secure the rights of the defenseless, which in this case were himself and his fellow Pisan prisoners. Hence, it is here that he begins his political allegory in earnest.

I further believe that Rustichello did not write the episodes after Episode 16 for King Edward because in that section of the text Rustichello slights King Arthur, whom Edward greatly esteemed. The Maiden of Listinois—we later learn that her name is Aleyne—has waited patiently at the court of Camelot for King Arthur to send some knights to help her and her mother defend their castle. King Arthur agreed to do this, but he never actually sent the knights. When Aleyne sees Branor on the jousting field at Camelot, she decides to take matters into her own hands and asks him to help her. Although Aleyne never consciously insults King Arthur for his lethargy, her reaction to him seems unfavorable in its silence: what she does not say speaks

[90] *Il Romanzo,* 17:14.
[91] Ibid., 17:16.
[92] Ibid., 18:2.

volumes about how unimpressed Aleyne is with the king. Arthur promised to help her but then did nothing.[93] Branor instead does help Aleyne, and her overjoyed people honor him even "more than if he was King Arthur in person" (*Et mout fasoient grant joie et grant fest au Viel Chevalier, et le henorent plus que c'il fust li roi Artus meïsmes*).[94] Since Edward felt great fondness for Arthur, it is dubious that he would have appreciated such a negative or at least lukewarm response to the great Breton king. Allegorically, King Arthur's inaction could be a reflection of Ugolino and Nino's inaction in solidifying a lasting peace treaty with Genoa that would have freed the Pisan prisoners.

If Rustichello da Pisa was writing his *Compilation* from prison in Genoa from 1284-1288, he was still in jail because of Ugolino and, later, Nino. Both Ugolino and Nino were unwilling or unable to make peace terms with Genoa, and it seems they disregarded the twelve *Anziani* to further their own political and financial agendas. When the Maiden of Listinois seeks counsel from twelve old and wise knights, this organized council resembles the council of the *Anziani*, or the twelve old and wise men who represented the Pisan orders, guilds, and citizenry.[95] Rustichello is indirectly appealing to the *Anziani* to help him and his fellow prisoners out of their current incarceration, since Ugolino and Nino would not.[96]

In Episode 23, Branor gives a speech to the people of Listinois and also the defeated men of Count Guiot. Branor exhorts the warring parties to now be friends and set aside their previous conflicts. Branor states:

---

[93] *Il Romanzo*, 17:22-25.
[94] Ibid., 20:4.
[95] The full title of the *Anziani* High Council was "Elders and Wisemen of the Citizenry" or *"Anziani e Savi del Popolo."*
[96] For the complex system of the *Anziani*, see Cristiani, *Nobiltà*, 189-211.

"Seingneur," fet il, "Damedeu nos a donés grant grace, que avés en votre pooir celui qeu vos ha fait se grant domajes. Et de ce dovés savoir buen gré a nostre Sire et a sa Mere, ne ne dovés monter en orgueill ne en bonbant, ainz en dovés estre plus hunble et meillor. Or, quant voz avés en votre pooir votre enemis, et que en poés faire votre voluntés, si vos lou je que voz faichois pes a lui, et que soiés buen amis et buen voisinz. Et atant se taist qi'il ne dit plus."

("'Lords,' he said, 'God has shown us great grace, for you have in your power the one who has caused you such great harm. For this you should be grateful to our Lord God and to His Mother, and you should not be arrogant and boastful, but instead become more humble and more virtuous. Now that the enemy is completely in your power and you can do with him what you will, I advise you to make peace with him and be good friends and neighbors.' At this, he fell silent, and said no more.'")[97]

Here again, Rustichello is using the character of Branor le Brun as a mouthpiece for himself and his fellow prisoners in Genoa and the city of Pisa. He could also be pleading with Genoa to be merciful toward Pisa, even though Genoa clearly won the Battle of Meloria. Furthermore, Genoa, with its adherence to the League against Pisa, could have easily crushed the city. Although the city of Genoa was commanded by the Church not to attack Pisa, the possibility that Genoa would still attack loomed largely. Moreover, Ugolino and Nino did not help matters by constantly angering Genoa to secure their lands, properties, and political powers in Pisa and Sardinia. On a perhaps more personal note for Rustichello, the Genoese needed to be merciful

[97] *Il Romanzo*, 24:1-3.

not only toward the thousands of Pisan prisoners, but also toward the city of Pisa itself. The prisoners in Genoa were obviously anxious because they did not know when they would be freed, but some did not even know when their next meal would be.[98] As M.L. Ceccarelli Lemut shows, the Pisan prisoners were responsible for their own living expenses in Genoa, and since many were living in misery, the captured Pisans had to sell their possessions (and lands) to the Genoese or to their more wealthy fellow Pisan prisoners.[99] Hence, in the speech Branor gives to the victors of the battle at Listinois, Rustichello could be imploring the Genoese to be benevolent and even try to be "friends" to all Pisans.

Rustichello again uses Branor le Brun as his personal spokesperson in Episodes 27-29, when Branor is forced to fight against the evil knight Sadoc and twenty of Sadoc's knights. Rustichello relates that Sadoc became a villain when his father was killed by an errant knight; now, Sadoc wants to kill every knight he encounters to avenge his father's death. But Branor no longer wants to fight, begging Sadoc to let him go peacefully on his way because he no longer wants to joust due to his great age and general fatigue. "Sire knight," said the Old Knight, "go with God, because I do not want to fight against you nor with any other; because you must know that in fact for many years I have abandoned this custom, and now I am in great haste" (*Sire chevalier, fet il alés de pars Deu, car je ne vuoill la joste de voz, ne de nul autres, car sachiez de voir qu'il a mout grant tenz que je ai laissiés ceste costume, et grant beiçonz est le por coi je vais ensint*).[100] Branor asks Sadoc to "let [him] go away freely" (*dont je voz pri que voz ne m'arestés de rienz, mais me liassiés aler tot quitemant*) and stop jousting because his heart is no longer in

[98] Ironically, once Ugolino was captured by Ruggieri, he was put in the very same situation as the Pisan prisoners in Genoa. That is to say, since all medieval prisoners were expected to pay for their own living expenses while in jail, Ugolino and his family essentially died because no one could pay for their maintenance.
[99] Ceccarelli Lemut, "I Pisani prigionieri," 81.
[100] *Il Romanzo*, 27:10.

it.[101] Since Branor has already defeated the best knights in the world, he does not wish to joust less honorable knights such as Sadoc. Furthermore, now that Branor's name will be preserved due to King Arthur's recording of it, there is no reason to continue fighting—if not for the greater good and the honor of chivalry. Here, Branor's plea not to joust echoes Rustichello's own fatigue and exasperation after his long incarceration in Genoa. In this section of the *Compilation,* Rustichello could be using Branor as a surrogate to beg the Genoese, or possibly Nino and Ugolino, to let him and his fellow prisoners go quietly on their way, even though Ugolino and Nino would not come to a compromise or respect a peace treaty with Genoa.

Branor is forced to fight Sadoc and his men, even though he doesn't want to. He wins the fight, yet he seems greatly upset afterward. Branor is troubled because he had to fight against his will, and also because Sadoc did not follow the rules of chivalry that allow a knight to decline a joust. Likewise, the Pisan prisoners were angry and sad because they had to stay in prison after 1288, mostly due to Ugolino and Nino not following the rules of diplomacy. After a peace treaty with Genoa had already been negotiated, Ugolino and Nino allowed Sardinian corsairs to attack Genoese ships, which nullified the treaty and kept the prisoners in Genoa. (Again, there was no general amnesty for all the Pisan prisoners until 1299). The revocation of the treaty would have obviously been traumatic for the prisoners, who saw themselves going home only to have their hopes dashed by the selfish actions of Ugolino and Nino. After the jousting with Sadoc, Branor le Brun is deep in thought or "mout pensif."[102] This is the only time in the Branor episodes that we find him in such a pensive mood. After fighting the ignoble Sadoc, he must be questioning the state of chivalry and the new generation of knights. Sadoc does not respect the rules of chivalry, and these are of paramount importance to Branor, who always, whoever his opponent

[101] *Il Romanzo,* 28:8.
[102] Ibid., 29:12.

might be, is courteous on and off the jousting field. Allegorically, Rustichello questions the behavior of Ugolino and Nino, who did not follow the rules of diplomacy and did not act chivalrously toward their fellow Pisans. It also seems to bother Branor that he just jousted with such an uncouth knight for no purpose other than defending himself and his own personal glory.

To joust, Branor usually must be helping a lady, and again, "ladies" represent a suspended allegory for the city of Pisa. After the episodes with Sadoc, the ladies/Pisa are very different from the lady who accompanied Branor to Camelot. Branor's unnamed lady was elegant, beautiful, and refined. However, after her appearance, the rest of the women in the Branor episodes are usually desperate and disheveled. It is as if Rustichello initially represents a Pisa that once was a glorious, rich, and elegant state. However, after the Battle of Meloria, Pisa/women are now frantic and tousled because their lives are fraught with danger and have no menfolk to defend them. Besides helping the Maiden of Listinois and her mother, Branor always helps ladies who cannot be saved by their own menfolk because these men are not strong enough or are outnumbered by their foe, just as Pisa was in the Battle of Meloria. In Episodes 30-34, the wife of a defeated knight asks for Branor's help in rescuing her daughter from the evil knight Karacados. She implores Branor to have pity on her: "Oh, noble knight, have pity on a poor desperate lady such as myself!" (*Ha, jentiz chevalier, aiés merci d'une si desconsiliés dame con je sui*!), and he does.[103] Branor says that he will do everything in his power to assist her: "Lady, know truly that I will do all that I can to ease your suffering" (*Dame, sachiés de voir que je mettrai tot le conseill que je porai en votre corrus apaier*).[104] Similarly, in Episode 35, the wife of a captured knight asks for Branor's help in freeing her husband from a group of vengeful knights. She pleads with Branor, "Ah noble knight, in the name of God, help this knight who is

[103] *Il Romanzo*, 30:5.
[104] Ibid., 30:7.

my Lord, whom these evil and disloyal men are leading to his death!" (*Ha, franc chevalier, por Deu, seucorrés cestui chevalier qui mon baron est, qu cist mauveis homes et desloiaus moinnent a sa mort*!).[105] These men are evil and disloyal because they have attacked a sole defenseless knight. Once again, Branor has pity on the lady and rescues her and her husband from this group of evil knights. Here, too, it is a woman (in this case, a knight's wife) who may embody the plight of all Pisans. These women may represent, by extension, the Pisan prisoners who were held "captive" by evil men. But in this case, the evil men were again Ugolino and Nino, and not necessarily the Genoese. Genoa, as the victor of the Battle of Meloria, could certainly and legitimately keep the captured Pisans as prisoners of war. However, it was unacceptable to remain a prisoner because the people who were to secure one's release betray their fellow countrymen for political and economic gain.

The numerous accounts of desperate women in the Branor le Brun episodes also suggest a political parallel to the plight of the Pisan women after the Battle of Meloria. In the Chronicle of Salimbene de Adam da Parma (1282-90), he writes of how the noblewomen of Pisa went in groups of thirty and forty on foot to Genoa to see their captive Pisan menfolk.[106] Salimbene writes that the Pisan women arrived in Genoa only to discover that their imprisoned menfolk were dead. Also, when these women returned home to Pisa, they found that their men had died there as well.[107] Even worse, Salimbene indicates that the Pisan women lived in a constant state

---

[105] *Il Romanzo*, 35:4-5.

[106] The distance between Pisa and Genoa is 101 miles. Baird's full text of Salimbene reads: "Also in that year after the battle between the Pisans and the Genoans, many Pisan women - beautiful, noble, rich, and powerful ladies - went in groups of thirty and forty, walking on foot from Pisa to Genoa in order to inquire about and to visit the captives. And when they asked the jailers about the captives, they were told, 'Yesterday thirty men died and today forty, and we threw them in the sea. It is the same every day with the Pisans, but [they] were denied burial altogether. Moreover, when these women returned home, they even found those whom they had left safe at home dead." See Salimbene De Adam, *The Chronicle of Salimbene de Adam*, ed. Joseph Baird et al. (Binghamton, NY: Medieval & Renaissance Texts & Studies, 1986) 542-43.

[107] Ibid., 542-43.

of "anxiety and pain," which was exacerbated by the fact that their men in Genoa could not obtain Christian burials and that their bodies were thrown into the sea.[108] Historian David Herlihy discusses further cruelty on the part of the Genoese; according to him, they left their Pisan prisoners alive to prevent their wives back home from remarrying, which consequently cut the Pisan birth rate.[109] Not being allowed to annul their marriages or divorce their husbands meant that a large portion of Pisan women could not legally remarry, and they thus could not bear legitimate heirs to help repopulate the city. Since a full quarter of the male Pisan population was either killed or incarcerated for life after the Battle of Meloria, future generations of Pisans would suffer because there were so few native Pisan men to repopulate the city.[110] Perhaps seeing a constant flow of distraught Pisan women, Rustichello was calling for a liberator and protector, not only for his fellow Pisan prisoners but also for them. A strong man was needed much like the character of Branor le Brun, who aids the suffering and protects the weak, whether it be Pisan men or women. Hence the political allegory is that women represent the plights of the Pisan *Popolo,* both in and outside of Pisa. Branor le Brun, or the "Old Knight," saves women and men, preserving the values and valor of chivalry. He represents an older political system, that of the *Anziani,* which upholds the rights of the citizenry. Moreover, Branor represents a much-needed type of knight that Rustichello is searching for to lead Pisa back to its former glory. Finally, all Branor's foes represent those who would deny the defenseless both justice and liberty. After the Battle of Meloria, those who infringed most on the rights of the Pisan citizenry were, of course, Ugolino della Gherardesca, Nino Visconti, and Genoa.[111] Branor was the last of

---

[108] Salimbene De Adam, *The Chronicle,* 542-43.

[109] Herlihy, *Pisa,* 44.

[110] Ceccarelli Lemut estimates that at least 36% of the Pisans imprisoned in Genoa died; see Ceccarelli Lemut, "I Pisani prigionieri," 82.

[111] Nonetheless, according to G. Pistarino, the Meloria was not the immediate or even decisive downfall of Pisa; for him, this battle was only a step in Pisa's ultimate decline. Pistarino cites that in retrospect, Genoa was crushed by

a dying breed of knights, just as Pisa was one of the few Ghibelline cities left in Tuscany. The solitary natures and representation of old and traditional ideals of both Pisa and Branor were easily transposed and transformed to fit other political contexts, which indicates that these episodes were always intended as a political allegory.

RUSTICHELLO'S POLITICAL AFTERLIFE: THE GREEK POEM[112]

In a Greek poem composed sometime between 1290 and 1450 and now entitled "Ho Presbys Hippotes"/ "The Old Venerable Knight," we find a redaction of the Branor le Brun episodes.[113] This poem is unique because it is the only known poem of Arthurian romance written in Greek. In the early nineteenth century, this 307-line poem was discovered in one surviving manuscript from the Vatican (*Vaticanus Graecus 1822*). The text of the poem is incomplete in both the initial and final sections, but it treats several episodes of the "Old Knight" or Branor le Brun found in Rustichello da Pisa's *Compilation.* Nonetheless, the Greek poem varies in some respects from Rustichello's original episodes, as found in the earliest complete manuscript, BNF f. fr.1463.

Pierre Breillat reported in 1938 that the poem was first published in 1821 and then forgotten for the next hundred years.[114]According to Breillat, we should not be surprised that the

---

Pisan forces at the Battle of Giglio in 1241 and at Acri in 1258, but no historian deemed these battles as definitive "ends" for Genoa. See Pistarino, "Politica," 42-43.

[112] Reproductions of the poem can be found in the following with French, English, and Italian translations respectively: Pierre Breillat, "La Table Ronde en Orient: Le poème grec du Vieux Chevalier," *Mélanges d'archéologie et d'histoire* 55 (1938): 308-40 (French translation), Marina Brownlee, "The Politics of an Arthurian Prequel: Rustichello, Palamedes, and Byzantium," in *La pluma es lengua del alma: Ensayos en honor de E. Michael Gerli*, ed. José Manuel Hidalgo, Juan De La Cuesta Hispanic Mongraphs, *Homenajes* 39 (Newark, DE, 2011), 53-77, and Adam J. Goldwyn, "Arthur in the East: Cross-cultural Translations of Arthurian Romance in Greek and Hebrew, Including a New Translation of the Old Knight," in *LATCH* 5 (2012): 75-105 [Brownlee and Goldwin have English translations], and, finally, Francesca Rizzo Nervo, *Il Vecchio Cavaliere,* 40-139 (Italian translation).

[113] However, Rodrick Beaton points out that the poem did not actually have a title. See R. Beaton, *The Medieval Greek Romance* (Cambridge: Cambridge University Press, 1989), 140.

[114] Breillat, "La Table," 309, fn. 2.

Branor episodes reached the Greek-speaking world, since these episodes were vastly popular until at least the sixteenth century. Breillat initially dated the poem to around 1300. Then, in a more detailed analysis of the language, watermarks, and parchment, Breillat placed the manuscript between the late thirteenth century and the second quarter of the fifteenth century (the 1290s to 1450s).[115] His final speculation is that the manuscript was written from 1425-1450,[116] and it was probably made in Cyprus under the Lusignans.[117]

The poem and *Compilation* differ mainly in the use of simile, metaphor, and courtly behavior. Literary historians Charles Gidel and Pierre Breillat, and Byzantine scholar Rodrick Beaton have previously noted that the Homeric allusions in the Greek poem are not found in the *Compilation*.[118] Furthermore, whereas there are relatively few similes and metaphors in Rustichello's *Compilation*, they abound in the Greek poem. The similes in Rustichello's Branor le Brun episodes usually compare Branor to "thunder and lightning," because he is so fearsome and quick which is similar to the storm-language used to describe Diomedes and Patroclus in

---

[115] Breillat, "La Table," 324-25.

[116] Ibid., 324.

[117] However, Cigni states that we should not exclude the possibility that Edward gave Rustichello the job of writing his *Compilation* initially in Acre, which at this time had over 40,000 inhabitants. The Pisans, Genoese, and Venetians all had their own quarters of the city (see F. Cigni, *Il Romanzo*, 9). Also, the Lusignans had many ties to Edward I through his parents Henry III and Eleanor of Provence. Philippe Ménard attests that it is also possible that Rustichello himself travelled to the Holy Land, where he may have received Edward's "book of romance" in Acre, or perhaps in Cyprus, which was a center of vernacular book production in French. See Philippe Ménard, "L'illustration du *Devisement du monde* de Marco Polo," *Bulletin de l'Université Tokyo-Mesei, Faculté de civilisation japonaise et comparée* 2 (1994): 23-27 and also his "L'illustration du "Divisement du Monde" de Marco Polo, *Bulletin de la Société Nationale des Antiquaires de France* (1985), 23-24. A. Garzya and R. Beaton don't think the manuscript was written in Cyprus, but agree that the text came from a locale where Greeks and Franks were together, and that it was written probably between 1240-1453. See Antonio Garzya, "*Matière de Bretagne* a Bisancio," in *Il mandarino e il quotidiano: Saggi sulla letteratura tardoantica e bizantina* (Napoli: Bibliopolis, 1983), 263-81, and also Beaton, *The Medieval*, 140-41. K. Ciggar believes that Edward brought Rustichello's manuscript to Acre in 1270 while he was on crusade. This attribution is dubious since it is highly doubtful that Rustichello's *Compilation* was completed by 1270 in G. Grivaud, "Literature, in Cyprus Society and Culture 1191-1374," in *Cyprus: Society and Culture 1191-1374*, ed. Angel Nicolaou-Konnari et al. (Leiden: Brill, 2005), 279.

[118] For the Homeric references see: Charles Gidel, *Etudes sur la littérature grecque moderne. Imitations en grec de nos romans de chevalerie depuis le XIIe siècle* (Paris: Imp. Impèriale, 1864), 78, and P. Breillat, "La Table," 318-21, Beaton, *The Medieval*, 144, and Giovanna Carbonaro, "Il cronòtopo del Vecchio Cavaliere (Ιππότης οπρεσβύτης)," presented at X Convegno Società Italiana di Filologia Romanza, VIII Colloquio Internazionale, Roma, 25-29 settembre 2012, in *Forme del tempo e del cronotopo nelle letterature romanze e orientali* (Soveria Mannelli [Catanzaro]: Rubbettino, 2014), 368.

Iliad 5.85.[119] Furthermore, when he fights "quintain," he is "fixed fast like a pillar of marble" which is similar to a metaphor that Homer uses when he describes the Greeks standing firm like a wall against a raging sea and wind in the *Iliad* 15.617-21. Moreover, when Branor is in battle, he is likened to a "lion among sheep," because all scatter and are defenseless against him. Here the language is similar to *Iliad* 5.135-140 where Diomedes slaughters the Trojans like a lion among sheep.[120] However, most authors writing on the Greek poem concentrate on the similes and Homeric echoes and work very little with the actual source material—i.e., the *Compilation*.[121]

Another significant difference between the poem and the *Compilation* is what constitutes courtly behavior. In the *Compilation,* Rustichello's knights are usually polite to their opponents. However, in the Greek poem, the insults and mocking (especially of Branor) fly freely. This jesting heightens the comedic value of the poem, but in some ways makes the Knights of the Round Table seem ignoble when they pick on an elderly knight and insult him. Furthermore, poking fun at Branor also lessens his prowess because one is laughing rather than being in awe of his great feats of arms.[122] Branor is always the butt of the joke in the Greek poem due to his great age and general appearance, yet he still defeats everyone he jousts. However, in the Greek poem, Branor is not the massively tall, strong, and noble figure found in the *Compilation*, though he bears some similarities to him. This prompts philologist Francesca Rizzo Nervo to think that the Greek poet had good knowledge of romance texts, but he perhaps relied on texts other than

---

[119] *Il Romanzo*, 6:9, 8:4, 13:8, 23:17, 29:5, and 32:3 ("thunder and lightning"). For more on storm metaphors in the *Iliad* see also Bernard Fenik, *Typical Battle Scenes in the Iliad* (Wiesbaden: F. Steiner, 1968), 20 and also A. Goldwyn, "Arthur in the East," 82-83 for similarities between the *Iliad* and the poem.

[120] *Il Romanzo*, 5:13 (pillar of marble) and 23:18 (lion among sheep), respectively.

[121] All the following have previously commented on the Homeric allusions in the Greek poem inspired by Rustichello's Branor le Brun episodes: Beaton, *The Medieval,* 144; James Douglas Bruce, *The Evolution of Arthurian Romance* (Göttingen: Vandenhoeck & Ruprecht, 1923), 28; Breillat, "La Table," *passim*; and Gidel, *Etudes,* 78.

[122] See verses 218, 244, 260, and 271 of the poem published in the works cited in fn. 112 of this chapter.

Rustichello da Pisa's *Compilation*.[123] More likely, this poet simply saw the level of absurdity of having a 120-year-old knight win a series of jousts against other Round Table Knights in their late teens and early twenties.

Marina Brownlee in 2011 attempted a comparative reading of the episodes of Branor in the *Compilation,* the Greek poem, and the episodes of the *Palamède* written before 1240.[124] This approach works well in comparing the Greek mythological hero "Palamedes" to the Saracen "Palamedes" in the *Tristan en prose*.[125] In both of these works Palamedes is an important character who usually thwarts the action of the "hero" of the story, (Ulysses and Tristan, respectively). Nonetheless, Brownlee's analysis is less compelling when she tries to compare the character of the *Palamède* to the character of Palamedes found in Rustichello's Branor le Brun episodes because Rustichello's Palamedes is fairly inconsequential. In fact, in the Branor episodes, one can hardly remember Palamedes name after the long succession of knights that Branor defeats on the jousting field. And although Palamedes, the "pagan" knight, is the first to joust with Branor in both the Greek poem and in the *Compilation*, the basis for comparison stops there. In the *Compilation,* Palamedes is defeated by Branor and then drops out of the narrative. However, the Palamedes in the Greek poem is treated differently and is mentioned more frequently, but not in a complimentary light. For example, once defeated by Branor in the poem, Palamedes throws down his arms and storms off the field because he was not able to win a

---

[123] Rizzo Nervo, *Il Vecchio Cavaliere*, 14.

[124] The *Palamède* only exists in fragments. A portion of this work is in Rustichello's *Compilation*. Palamedes is a Saracen knight who converts to Christianity and becomes a Knight of the Round Table. Stories about Palamedes in Arthurian romance usually center on his rivalry with Tristan, unrequited love for Iseult, and his hunting of the Questing Beast.

[125] In Greek mythology, Palamedes fights for the Greeks against the Trojans and is sent by Agamemnon to retrieve Ulysses. Ulysses feigns madness and sows his fields with salt until Palamedes, suspicious of Ulysses' behavior, places Ulysses' son Telemachus in front of the plow. Ulysses immediately stops plowing and reveals that he is sane. Ulysses never forgave Palamedes for sending him to war and later frames Palamedes for theft of war booty. Palamedes is deemed a traitor and is executed by Ulysses and Diomedes or, in some accounts, by his Greek compatriots.

For more information on the *Tristan en prose* see fn.32 of the Introduction of this dissertation.

victory over the Old Knight and claim the lady as prize. This sore loser behavior is not found in the *Compilation,* where Palamedes simply loses the joust and then leaves the field. So although the Greek poet probably read or had heard the Branor episodes from the *Compilation,* it seems he modified them to fit his political context.

Probably the biggest difference between the *Compilation* and the Greek poem is that in the poem, Branor never says why he wants to joust the Knights of the Round Table. Even though Branor withholds his identity and purpose until the very last episodes, he then explains w, why he came to Camelot after so many years and why he wants to joust with the younger generation of knights. However, in the Greek poem the entire point of the Branor episodes, that is, the contrast between the Old Table and New Table, is lost. All Rustichello's Branor le Brun episodes center on the premise that an "Old Table" Knight is superior to the New or Round Table Knights. The anonymous Greek author of the poem maintains the old vs. new knight scenario in the sense that Old Branor fights the younger Round Table Knights; however, the poet never addresses Branor's reason(s) for fighting, as philologist Francesca Rizzo Nervo has astutely pointed out.[126] She was also the first scholar to suggest that there is a political allegory in the Greek poem.[127]

The political message of the Greek poem, according to Rizzo Nervo and also, Giovanna Carbonaro, is the contrast between conservative Greek aristocracy with its traditional values and the new Western aristocracy, which was becoming the dominant ruling class.[128] Since Branor wins all his jousts and represents the "conservative Greek aristocracy," the assumption is that the values of the Western aristocracy should be defeated by traditional or Republican values. Most scholars are in accordance with this political interpretation of the "Old Knight" poem in Greek.

---

[126] Rizzo Nervo, *Il Vecchio Cavaliere,* 18-19, and 24.

[127] Francesca Rizzo Nervo, "Il 'mondo dei padri' nella metafora del Vecchio Cavaliere," *Quaderni del siculorum gymnasium* 15 (1985): 115-28.

[128] See Rizzo Nervo, *Il Vecchio Cavaliere*, 19, and 23-24 and G. Carbonaro, "Il cronòtopo," 171 for an excellent summation of Rizzo Nervo's work.

Nonetheless, the final episodes—where Branor goes home, reveals his name and condition- to King Arthur in a letter, and then dies—are missing from the poem, and his fate remains a mystery. Rustichello also wrote the Branor episodes for political motives in the *Compilation*, and in a sense, he too was pitting traditional values over new values, as in the case of the Greek poem. But more so, it seems Rustichello wished for a political reality that no longer existed and a strong leader that would bring him and his fellow prisoners home.

LITERARY AFTERLIVES OF RUSTICHELLO'S BRANOR LE BRUN: TRISTANO PANCIATICHIANO, CANTARE DI LANSANCIS, LA TAVOLA RITONDA, TRISTANO VENETO, BOAIRDO, AND ARIOSTO

As I have presented potential political implications of the Branor le Brun episodes, I will now discuss the literary-political legacy of the invented knight Branor le Brun after the political upheavals in Pisa in the late thirteenth century. In Italy, the character and name of "Branor" is often confused with "Brunor" and spelled "Brannor." This confusion is evident in the *Tristano Panciatichiano, Cantare di Lansancis, Tavola Ritonda,* and *Tristano Veneto.* As literary scholar Daniela Delcorno Branca notes, "due to the similarities in names, Italian reworkings often confused Branor le Brun, the Old Knight, with Brunor, the father of Galehot."[129] Perhaps Rustichello was counting on this confusion in the similarities of the names when he chose a name for Branor and stopped referring to him as only the "Old Knight."

In the *Tristano Panciatichiano* (*TP*) written in the early fourteenth century, the Branor found here is not Rustichello's Branor, but a knight of Tristan's generation and the nephew of Lancelot of Gaul.[130] In the *TP*, Tristan and Branor have a brief fight over a lady, but since Tristan beats Branor, he is obviously not Rustichello's invincible Branor le Brun. In the *Cantare*

[129] Daniela Delcorno Branca, *Tristano e Lancillotto in Italia: Studi di letteratura arturiana* (Ravenna: Longo, 1998), 198, fn. 62.

[130] See Gloria Allaire's translation of the *Tristano Panciatichiano*, *Italian Literature. Il Tristano Panciatichiano*. ed. F. Regina Psaki. (New York: D.S. Brewer, 2002), 173-85.

di Lansancis (1440), there is the story of an "Old Knight" who defeats all the Round Table Knights with a magic lance. This knight is eventually defeated by Tristan's cunning, which never happens in the *Compilation*.[131] In the *Tavola Ritonda* (1446), the Branor story is essentially a summary of Rustichello's episodes in Italian, and it is fairly faithful to them.[132] In the *Tristano Veneto* (*TV*) written in 1487, Rustichello's episodes of Branor are not substantially changed, but they are placed at the end of the work instead of the beginning.[133] After Branor's death in the *Compilation,* the Round Table Knights essentially pick up where he left off and continue to save damsels in distress, and to fight jousts and wars. By ending the work with Branor's death, and then not telling any more adventures of the Round Table Knights, the author creates the impression that all chivalry has died with Branor le Brun. Nonetheless, despite these slight modifications of textual order in Italy, the work remains virtually untouched. As in later French redactions of Rustichello's *Compilation,* Branor le Brun's main storyline is maintained throughout, although it is often abbreviated and written in more standardized French.[134]

The Branor episodes and Arthurian romance in general were appreciated more in Northern Italy than in the South. The Gonzaga of Mantua, the d'Este of Ferrara and Modena, and the Visconti-Sforza of Milan all owned Arthurian romances, but usually in French and not in Italian. In 1407, the library catalog of the Gonzaga family records that they owned a book

---

[131] Marie-José Heijkant, "From France to Italy: The Tristan Texts," in *The Arthur of the Italians: The Arthurian Legend in Medieval Italian Literature and Culture,* ed. Gloria Allaire et al. (Cardiff: University of Wales, 2014), 56-58.

[132] Daniela Delcorno Branca, "The Italian Contribution: La Tavola Ritonda," in *The Arthur of the Italians: The Arthurian Legend in Medieval Italian Literature and Culture,* ed. Gloria Allaire et al. (Cardiff: University of Wales, 2014), 72.

[133] Heijkant, "From France," 52-53.

[134] Since the 15th century, the works attributed to Rustichello were divided into two sections: one called the *Guiron le Courtois,* published in 1501 by Vèrard (Paris), and the other called the *Meliadus* published in 1532 by both Galliot du Pré and Denis Janot (also published in Paris).

entitled *Branorius Lebrun* (Branor le Brun).[135] Likewise, a book entitled *Le Viel Chevalier* was in the library catalog of Yolande of Savoy and dates from 1479.[136] The d'Este owned several copies of the *Meliadus*, the *Guiron le Courtois*, and also one book entitled *Un libro di Brus* (*A Book of Bruns*).[137] This book, probably called *"Bruns"* not *"Brus,"* was most likely the story of Branor le Brun. Since both Boiardo and Ariosto worked at the d'Este court, they had ample opportunity to read the romance(s) attributed to Rustichello da Pisa and take various elements from them.

Both Boiardo and Ariosto selected elements from the Branor episodes for their *Orlando Innamorato* and *Orlando Furioso*, respectively. In Matteo Maria Boiardo's *Orlando Innamorato* (1482), we find traces of Rustichello's Branor. Firstly, Boiardo's *Orlando Innamorato* and Rustichello da Pisa's *Compilation* (also known as the *Meliadus*) both have very little to do with their titular characters in their introductions and prologues. No one ever finds out much about "Meliadus" in the *Compilation*; likewise, the initial episodes of the *Orlando Innamorato* (*OI*) have very little to do with the main character of the work, "Orlando." On the other hand, Boiardo's first canto has more to do with Angelica and Charlemagne. Nonetheless, Boiardo took many elements from the introduction and Branor le Brun episodes of the *Compilation*, and this is especially evident in his first canto of the *OI*.

Boiardo begins his *OI* on the day of Pentecost, which is the same day that Branor arrives at Camelot in the *Compilation*. Rustichello's Branor le Brun appears at King Arthur's court with a beautiful maiden who turns out to be his niece. Branor offers his niece as a prize to any man who can best him in jousting. Similarly, in the *OI*, Angelica is the prize for whichever knight

---

[135] See Rizzo Nervo, *Il Vecchio Cavaliere*, 8.

[136] Yolande of Savoy is also known as Yolande of France or Valois. Ibid., 8.

[137] Gloria Allaire, "Owners and Readers of Arthurian Books in Italy," in *The Arthur of the Italians: The Arthurian Legend in Medieval Italian Literature and Culture*, ed. Gloria Allaire et al. (Cardiff: University of Wales, 2014), 191.

who can beat her brother Uberto in a joust.[138] But whereas Branor le Brun is a quasi-giant, Angelica's brother Uberto is a normal-sized knight. Instead, Boiardo has his Angelica escorted by four giants, which perhaps mimics the gigantism imagery of Branor in Rustichello's introduction.[139] Lastly, Angelica's brother Uberto, like Branor le Brun, is successful in beating all his opponents. However, Uberto wins because he has a magic lance that knocks over all his opponents at the slightest touch, whereas Branor wins his jousts by sheer prowess. Unfortunately for Uberto, his lance is taken by the foolish Astolfo, and his winning streak ends.

Boiardo had ample opportunity to read the chivalric romances in the d'Este library, and one of these books was most likely Rustichello's *Compilation.* Boiardo essentially took the initial set-up of the Branor le Brun episodes—a strange knight, arriving at Camelot during Pentecost with a beautiful lady who challenges all the knights to a joust—and modified it to the tastes of the d'Este court. However, Boiardo added a magical element (i.e., the lance) for his hero to be invincible like Branor. Furthermore, Boiardo also made his hero a young man of normal proportions and not of giant dimensions to fit the typical model of a romance-hero-knight and not a strange apparition. Lastly, some of the places mentioned in the *OI*—for example, the "Fountain of the Pine" (*Fonte del Pino)* and "Merlin's Stone" (*Petron di Merlino*)—appeared for the first time in the *Compilation,* and these place names were often re-used in Italian redactions of Arthurian romances.[140]

We find some elements of Rustichello's *Compilation* also in Ludovico Ariosto's *Orlando Furioso* (1521). Here we find echoes of the *Compilation,* but fewer elements directly related to the character of Branor le Brun. Firstly, Bradamante's jousting contest recalls the initial episodes

---

[138] Angelica's brother Uberto is really named "Argalia."

[139] *OI*, I. 28.

[140] *OI*, I.27, and Gardner, *Arthurian Legend*, 277. Gardner mentions the connection between Rustichello and Boiardo. An interesting line of study would be to find even more hidden parallels between the works, which I am sure there are.

of Branor jousting at Camelot because she, like Branor and Uberto, defeats everyone she jousts.[141] Likewise, Bradamante's imprisonment in Merlin's tomb recalls parts of the story of Brehus sans Pitié, who discovered the ancestral tomb of Febus le Brun, and consequently also the ancestry of the Branor's family. There are also direct parallels to the Febus-Brus story in the episodes in which Astolfo descends into a cavern and hears the story of Alceste and Lydia. Alceste, like Febus, performs brave deeds and destroys many kingdoms to win the love of Lydia. However, Lydia then scorns Alceste and he dies for love of her, much as Febus dies for love of his lady.[142] Furthermore, the fight between Marfisa and Ruggiero recalls the fight between Tristan and Lancelot in the *Compilation*, which is found directly after the Branor episodes. There are also many giants in Ariosto, but they are all evil and vain, which is entirely dissimilar to the character of Branor le Brun.[143] Rustichello wrote his *Compilation* over two hundred years before Boiardo and Ariosto, and both Boiardo and Ariosto were probably influenced by his work. Despite the likely influence of Rustichello's work on two of the most famous authors of Italian romance in the Renaissance, Rustichello is rarely mentioned in the anthologies of Italian literature, whereas Ariosto is always included in them and, to a lesser extent, Boiardo is as well.

CONCLUSION

My interpretation of the Branor le Brun episodes has been largely a local one. With all that was happening in and to Pisa in the late thirteenth century, it would be difficult not to think that these events affected Rustichello da Pisa and his writing of the *Compilation*. Cecilia Iannella

---

[141] Pio Rajna, *Le fonti dell'Orlando Furioso ... seconda edizione corretta e accresciuta* (Firenze: Sansoni, 1900), 505. Of note, Bradamante took her lance from Astolfo, who took his lance from Uberto, which links Boiardo's *OI* to Ariosto's *OF*.

[142] *OF*, 34.11-43.

[143] *OF*, 15.49-62; Caligorante is based loosely on the Giant Zambardo in Boiardo's *OI* (I.5.78-6.14), also the evil Orto (17.29-65).

writes that "Pisa, on the one hand, ran the risk of looking for traces of a remote past in a present that only partially preserved [it] (a Pisa that was but is no longer)." That is to say, Pisa too frequently basked in the glory of past victories and successes, which no longer reflected its current state. The character of Branor le Brun sets out to prove himself against the new generation of Round Table Knights because he is concerned by the uncertainty of his legacy and also aware of the fact that he cannot dwell on past successes. Unfortunately, the Pisans never learned that just because they were once formidable and prosperous they would not necessarily always remain so. Iannella argues that Pisa "read contemporary events as signs for the future (a Pisa [that] will be, but is not yet)."[144] However, the horrible years after the Battle of Meloria were an ominous portent of this or any kind of future for Pisa. Branor le Brun, and Pisa for that matter, were still "alive" when all the other Old Table Knights or Ghibelline powerhouses were long dead. When Branor le Brun dies, he is ultimately replaced by New or Round Table Knights, which is a sign of the future, and this future, like that of Pisa, remained very uncertain. Branor's legacy as the most potent knight in the world survived when King Arthur recorded his adventures, whereas Pisa continued to survive due to its independent nature and general stubbornness.

By the early fourteenth century, Pisa was a "new" society formed by "new" men from the lower or at least non-noble strata of society who championed the citizenry or *Comune di Popolo*.[145] Rustichello da Pisa witnessed and experienced the political upheavals of his city that were largely caused by the della Gherardesca and the Visconti families. These two rival families

---

[144] My translation of Cecilia Iannella's "Politica e cultura a Pisa del Trecento": "*si rischia cioè, da una parte, di ricercare tracce del passato remoto in un presente che le conserva solo parzialmente (ciò che Pisa è stata e non è più), dall'altra di leggere gli eventi come segni premonitori del futuro (ciò che Pisa sarà, ma ancora non è).*" Athenet online, Numero 21, Novembre 2007, *https://www.unipi.it/web/athenet/21/art_3.html*

[145] Poloni, "Gli uomini," 159.

forced Pisa to openly declare its Ghibellinism, and this alienated Pisa from most of the rest of Tuscany, much of Italy, and certainly the Church. Ugolino and Nino's thirst for political power in Pisa and Sardinia almost destroyed the entire city of Pisa. The political intrigues of Ugolino and Nino could also have destroyed the life of Rustichello da Pisa, who was imprisoned for over 14 years largely because of them. Rustichello and Pisa were finally saved by an old yet strong man named Gualtieri Brunforte, who put an end to the political vacuum created by the Pisan Guelphs. Brunforte restored the former Ghibelline government of Pisa, and hence the Republican values of old, by defeating the "new" and despotic leaders Ugolino della Gherardesca and Nino Visconti. The strength, nobility, magnanimity, and chivalrous nature of Branor le Brun did not go unnoticed by lovers of romance, as we will see in the next chapter when we accompany Rustichello's *Compilation* to rural France in the middle of the fourteenth century. Here we will discover how the owner of the château of St. Floret, a certain Athon de St. Floret, applied the character of Branor le Brun to his own political situation and locale.

Chapter 4 – The Writing on the Wall (Rustichello Goes to St. Floret)

The reception, audience, popularity, and legacy of Rustichello da Pisa's *Compilation* can partially be pieced together through analysis of the puzzling Arthurian fresco cycle in St. Floret, France (1350-1380). This fresco cycle is usually dismissed or overlooked as just another of the odd places where Rustichello's *Compilation* appears.[1] But perhaps the many remaining manuscripts and peculiar circumstances of Rustichello's work should not be viewed as merely happy accidents, but instead as evidence of the popularity of Rustichello's work both in and outside of Italy [Figure 8].

Figure 8: Panoramic of the village of St. Floret, France. Florea, 2015.

[1] No other fresco cycles are known that were directly inspired by Rustichello's *Compilation*.

The location of the fresco in the rural Auvergne region of France only adds to the mystery of the diffusion of Rustichello's text. The remote village of St. Floret is far from Paris and much closer to Avignon, so it is interesting to ponder how Rustichello's *Compilation* arrived here. Furthermore, St. Floret is not directly located on a main trade or pilgrimage route. Also, this village was not ruled by a particularly well-connected family of the French aristocracy, but was governed by a very minor Lord. St. Floret lies in the middle of the Auvergne, which was a transitional zone between the established French royal court to the North and the Midi region to the South, with the Avignon papacy (1309-77) in the middle. Because St. Floret was located between two vastly different courts, the lords of St. Floret were susceptible to diverse cultural influences. As cultural historian Malcolm Vale states, "constant contact between princely courts tended to hold back the emergence of self-contained cultures which, rather, remained eclectic and open to outside influences of many kinds."[2] I believe that St. Floret had such an "eclectic" court, making it logical that the cultural products from this area such as the fresco cycle would be unique and, in a sense, montages of several different cultures. Being exposed to a wide variety of cultural influences could explain why a Franco-Italian romance text inspired this fresco cycle painted by Italian artists here in the heart of Occitania.

DISCOVERY OF THE FRESCO CYCLE AT ST. FLORET

The fresco cycle at St. Floret was discovered in 1861 by an Italian artist who was restoring the paintings at the nearby Abbey of St. Austremoine in Issoire under the direction of historian and scholar Anatole Dauvergne.[3] Dauvergne paid the farmer who was using the château

[2] Malcolm Vale, *The Princely Court Medieval Court and Culture in North-West Europe 1270-1380* (New York: Oxford University Press, 2001), 297.

[3] The story of the discovery of the fresco cycle at St. Floret and its past restorations is found in Loomis and Loomis, *Arthurian Legends,* 57-58, Amanda Luyster, "Courtly Art," Courtly Images Far from Court: The Family St. Floret, Representation, and Romance" (Ph.D. diss., Harvard University, 2003), 289-291, and Gloria Allaire, "Arthurian Art

to store his farming equipment to vacate it so that he could study the fresco cycle, and so that it would not be further damaged. Then, Dauvergne alerted the Ministre de Beaux Arts of his discovery of the fresco cycle. Dauvergne tried to restore the frescoes by outlining them in black and rubbing them with linseed oil and wax to make the colors more vibrant. He then recorded the rubrics of the fresco (somewhat erroneously) and made sketches of them, sending a report of his findings to the Sorbonne in 1863. Unfortunately, Dauvergne's copies of the fresco cycle were destroyed in a fire in 1870. A. Racinet (1888) made lithographs of Dauvergne's tracings for his history of costumes, but these are not accurate. Racinet's lithographs were in turn traced by P. Gélis-Didot and H. Laffillée in 1889. In 1902 and 1909, L.J. Yperman was commissioned by the state to make watercolor copies of the surviving scenes at St. Floret.[4] Finally, in 1909 the fresco cycle was recognized for its rareness and beauty and was classified as a Monument Historique in 1909. Nonetheless, the château that houses the fresco cycle was not bought by the French government until 1931.

The fresco is a mix of standard fresco technique and tempera.[5] It has undergone at least three restorations since its discovery in 1861; it was restored in 1863 by Anatole Dauvergne, then in 1962 by M. Nicaud, who once again did more harm than good. From 1988-1995 the frescoes were again restored by Pierre Laure, who returned them to their original appearance before they were damaged by the disastrous attempts at restoration by Dauvergne and Nicaud. Laure restored only the north and east walls of the fresco cycle, which is quite apparent by the sad state of the south wall and non-extant fresco on the west wall.[6]

---

in Italy," in *The Arthur of the Italians: The Arthurian Legend in Medieval Italian Literature and Culture.* ed. Gloria Allaire et al. (Cardiff: University of Wales Press, 2014), 215.

[4] Muriel A. Whitaker, *The Legends,* 128, and Allaire, "Arthurian Art," 215.

[5] For more information on the actual fresco technique used in the paintings at St. Floret, see Luyster, "Courtly Art," 290-91.

[6] Luyster, "Courtly Art," 290-91, and Allaire, "Arthurian Art," 215.

In the 1930s, Roger Sherman Loomis and his wife, Laura Hibbard Loomis, visited the frescoes at St. Floret and noted that the surviving rubrics were very similar to the *Compilation* written by Rustichello da Pisa in the 1270s. The Loomises dated the fresco cycle to 1350-70, which is less than one hundred years after Rustichello started writing his *Compilation* (1270s), *and* a mere fifty years after the oldest surviving copy of the *Compilation* was made (fr. 1463 from 1290s-1310). The Loomises emended the faulty transcription of the rubrics made by Dauvergne, who was credited with discovery of the fresco cycle in the 1860s. Also, R.S. Loomis noted that the "additional" episode portrayed in the fresco cycle was from the *Tristan(s)*, perhaps by Thomas or Béroul. It is fortunate that both Dauvergne and Loomis recorded the rubrics because many of them no longer survive due to disastrous past "restorations" and the effects of time.[7]

APPROACHING ST. FLORET

The problem with any studies of the fresco cycle at St. Floret is that "readers" of them must have backgrounds in both art history and in romance texts. As Gloria Allaire more eloquently states: "The Saint Floret wall paintings are a case in point of the need for collaboration between art historians and the literary specialists: lack of knowledge in either sphere can lead to faulty interpretations."[8] In 2003 art historian Amanda Luyster wrote her dissertation, entitled "Courtly Art Far From Court: The Family Saint-Floret, Representation, and

[7] I used the Loomises' transcription of the rubrics, which I have found to be largely accurate. The Loomises worked from the Dauvergne transcriptions, which they then heavily emended. I checked the Loomises' transcriptions against the remaining rubrics when I examined them on site in St. Floret in June 2015. Amanda Luyster also relied on the transcriptions done by Roger Sherman and Laura Hibbard Loomis, in their *Arthurian Legend in Medieval Art,* pt. II, 57-61. See Dauvergne's nineteenth-century transcriptions in Anatole Dauvergne, "Note sur le château de Saint-Floret," *Mémoires lus à la Sorbonne, Archéologie,* 67-81, (Paris: Publication of the Sorbonne, 1863), 1-7, and Luyster's slightly emended transcription in her "Courtly Images," 135-138. Note that the Branor le Brun rubrics did not survive even in the nineteenth century, so there is no transcription of them, even in Anatole Dauvergne's transcription of the rubrics.

[8] Gloria Allaire, "Arthurian Art," 215.

Romance." Even her title points to the fact that St. Floret is far removed from the more established and influential courts in both Paris and Avignon. Luyster analyzed the complex imagery of the fresco cycle in its architectural space. She believes that earlier sacred art influenced profane art, starting from the beginning of the fourteenth century. For Luyster, each scene at St. Floret is framed within its architectural space, and the architecture unifies the whole composition. For her, the narration moves forward in time and space, divided by the different architectural elements of the room. However, she relies heavily on illuminated versions of *Tristan* manuscripts to prove her claims regarding the artistic influences and merits of the cycle, often neglecting their actual inspiration, Rustichello da Pisa's *Compilation.* Her comprehensive dissertation provides a detailed analysis of the families at St. Floret, a good schematic drawing of the fresco layout (both actual and proposed), black-and-white photos of the cycle, and some comparisons to different pictorial and architectural elements found in France. Nonetheless, because she loses sight of the text, Luyster ultimately fails to identify correctly many of the scenes and images portrayed.

Luyster considers images and words to be two different languages or sign systems that can never directly convey reality.[9] She cites the theory of Fruhmorgen-Voss (1975), who wanted images and text to be read as "independent responses to the story," but giving preeminence to neither the image nor the text.[10] This is a constant problem for the correct reading of St. Floret: is it more important to concentrate on the images or on the words in the rubrics? Art historian and literary scholar James Rushing believes that images can be read independently of the text: "indeed, not only can the visual narratives be understood without reference to the texts, they very

[9] Luyster, "Courtly Images," 12.
[10] Ibid., 13.

often must be read independently, in order to be understood properly at all."[11] Luyster seems to agree with this interpretation, and for her, "the general point to be learned here is that medieval viewers were expected to understand the images on their own terms, to create narrative (visual diegesis) and meaning (visual exegesis) based on the images themselves, read in terms of a variety of semiotic codes, not in terms of the canonical texts."[12]

I agree with the idea(s) shared by the above cited on how the fresco cycle at St. Floret should be read. That is to say, both image and text should be on equal ground. Similarly, it is possible that contemporary viewers of the fresco cycle at St. Floret could read image and text independently. Nonetheless, when one currently "reads" or observes the fresco cycle at St. Floret, it is so lacunal that one has to use a combination of both the visual image and remaining rubric(s) to infer what episodes from the *Compilation* are being narrated. Hence, although the ideas and sentiments of Saussure, Voss, Rushing, and Luyster could be and perhaps should be applied to the "reading" of the mural cycle at St. Floret, it is a bit difficult to do so when we do not have the complete series of image (fresco) or text (rubrics). Since Luyster is "visually" and not textually based, she naturally tries to identify the visual/pictorial inspiration for the painting at St. Floret in illuminated manuscripts, paintings, and other fresco cycles.[13] She consulted manuscripts and other works of art contemporary to the painting of the fresco cycle at St. Floret.

---

[11] James A. Rushing, *Images of Adventure: Ywain in the Visual Arts* (Philadelphia: University of Pennsylvania, 1995), 261.

[12] Luyster, "Courtly Images," 191.

[13] Luyster chose manuscripts that date from the mid-fourteenth century and/or the time period in which she thinks that the fresco cycle at St. Floret was painted. She suggests similarities between the fresco and three illuminated manuscripts: BnF MS. Nouv. Acq. Fr. 5243, Fol. 2v, (where Arthur receives Feramont and his dwarf (From the *Guiron*) Milan, 1370-1380; BnF MS 295. Fol. 240, Neapolitan, executed by a French artist(?) c. 1324-28; and Getty Museum, Ms. Ludwig XV 5, Fol. 1r, *Roman de bon Chevalier Tristan, fils au bon roy Meliadus Leonois*. French, 1320-40. Nonetheless, aside from a couple of similar stylistic points in the abovementioned manuscripts, none are convincingly similar to the fresco cycle at St. Floret. Luyster used only six manuscripts, where Cigni lists at least twelve that contain the Branor le Brun episodes in their entirety or in part. Nonetheless, Cigni does not compare any of the images in the different manuscripts. In fact, this line of research of the images in the different manuscripts attributed to Rustichello has not been pursued by anyone to my knowledge, but certainly should be.

Here, I do not dispute her insights into these images or her methodology in approaching them, but textually speaking, Luyster consistently uses the work of Eilert Löseth when referring to Rustichello da Pisa's text.[14] Furthermore, she maintains that the *Meliadus* or *Compilation* by Rustichello was an obscure text; however, the sheer number of extant copies and variety of settings and formats in which Rustichello's work is found all seem to challenge this argument.[15]

But the question remains: how should we "read" a fresco cycle? René Wetzel has developed an intriguing approach to how to view and understand a fresco cycle when combined with text. He states that we need to consider a fresco cycle "as a 'document/monument,' coherent, as a pluri-dimensional universe of the courtoise."[16] It is with Wetzel's methodology of reading the fresco cycle as a document/monument, alongside using Timothy Reuter's theories on social markers, that I read the fresco cycle at St. Floret. As Timothy Reuter further explains, one way in which elites maintained their dominance was by using "a whole series of social markers which express and actualize that dominance."[17] Reuter clarifies that social markers are apparent in personal appearance, speech, dress, food, and rituals of social interaction.[18] The Lord of St. Floret meted out justice and also received guests in the room where the fresco is housed.[19] The

---

[14] Luyster, "Courtly Art," 151, 165-166, 340.

[15] Although Löseth's monumental and overly complicated work is still important, it has been superseded by Cigni. Luyster continues to use Löseth. Ibid., 151 fn. 274.

[16] René Wetzel, "La famille des Vintler et le programme des peintures murales de Castelroncolo (Runkelstein) près Bolzano dans le contexte de la civilisation courtoise." In *Paroles de murs: peinture murale, littérature et histoire au Moyen Âge* (Grenoble: Centre de Recherche en Histoire et histoire de l'Art. Italie, Pays Alpins [CRHIPA] – Université Pierre Mendès [France] [UPMF], 2007), 79-80. Original language quote : ". . . prenant au sérieux l'ensemble des peintures murales de Castelroncolo et en les considérant comme un 'document/monument' cohérent, comme univers courtois pluridimensionnel."

[17] Timothy Reuter, "Nobles and Others: The Social and Cultural Expression of Power Relations in the Middle Ages," in *Nobles and Nobility in Medieval Europe. Concepts, Origins, Transformations,* ed. Anne J. Duggan (Woodbridge, Suffolk: The Boydell Press, 2000), 89.

[18] Ibid., 89.

[19] For more on the defensive responsibilities of these village lords, see Marie-Claire Dessert, "Recherche sur les possessions des comtes-dauphins d'Auvergne de la fin du XIIe au début du XVe siècle (1169-1426 environ)," (Thèse, L'École Nationale des Chartes, Paris, 1955), 141.

"appearance, speech, dress, food, and rituals" of the ruling lord of St. Floret would have been observed by all classes of people, both native to and visitors at St. Floret.

The Lord of St. Floret was responsible for dispensing justice in all matters concerning the village, and we can imagine that the majority of his unlearned parishioners viewed the large and colorful fresco cycle with some degree of awe. Moreover, those parishioners who could read a little were probably baffled by the language of the rubrics. This is because the Lord of St. Floret chose to put the rubrics of the fresco cycle in the langue d'Oïl (the language of the French court) and not in Occitan (the language of the people of St. Floret). This would have put the Lord of St. Floret on a level (real or imagined) that was superior to the townspeople and other minor lords from the region.[20]At the tumultuous time when the frescoes were painted, there were many ways to die or be killed in central France such as the Black Death, invading mercenary soldiers, and the occasional famine. Perhaps the Lord of St. Floret used the many fighting scenes and stances found in the frescoes to show his knights how to fight, but also to assure the villagers that a strong and warlike lord watched over them as a protector but also, if need be, a despot.

DATING OF THE FRESCO CYCLE AT ST. FLORET

Those historians who have attempted to date the fresco cycle have relied mainly on studies of the costumes, hairstyles, and armor of the characters portrayed in the cycle. O. Beigbeder, M. Beaulieu, A.G. Manry, A. Racinet, M. Whitaker, and A. Courtillé all dated the

[20] For more on the Occitan language in France, but especially in Avignon, see Catherine Lèglu, who demonstrates that there is some evidence of speakers of Occitan at the papal court, and cites a certain Peyre de Paternas writing from Avignon in Occitan c. 1349. See C. Lèglu, *Multilingualism and Mother Tongue in Medieval French, Occitan, and Catalan Narratives* (University Park, PA: Pennsylvania State University Press, 2010), 64. However, there does not seem to be a consensus on what language or languages were spoken in Avignon. In fact, Louise L. Maertz wrote in 1863 that since the papal court was "composed of Italians, the Italian became the language of Avignon." See L. Maertz, *Key to a New Method for the Study of English Literature* (Chicago: S.C. Griggs, 1883), 19. Nonetheless, this seems highly unlikely, since the papal court was now established in France and the next six popes were all French.

fresco cycle from the reign of King Charles V (1364-1380), again based mainly on the costumes and armor. These authors are all strongly influenced by the 1963 work done on the fresco cycle by Deschamps and Thibout.[21] The Loomises gave the frescoes a slightly earlier date of 1352-1362, based on similarities between the fresco cycle of St. Floret and the miniatures in a codex of the *Guiron le Courtois* made (possibly in Naples) for Louis of Taranto.[22] Both Margaret Scherer (1945) and Luyster accept the earlier date given by the Loomises. Luyster bases her conclusions on the date from the Neapolitan (?) manuscript [23] that the Loomises cite and her own analysis of costume and hairstyles.[24] Scherer gives no evidence as to how she came to this earlier date.[25]

Fresco painting and manuscripts often, to some extent, reflect provenance. Moreover, the choice of text and clothing style depicted at St. Floret hint at the origins of both the patron and painters of the fresco cycle. A change in fashion in the mid-fourteenth century meant that the older-style surcoat cut in one piece, with garments that had inset sleeves, was replaced by more close-fitting clothing.[26] Likewise, the pointed helmets, short surcoats and elongated sabatons of the knights of St. Floret,[27] and Iseult's découpé surcoat with long sleeves that reveal her shift, were popular during King Charles V's reign, but were out of style by 1380.[28] Concentrating solely on fashion to date the fresco cycle at St. Floret is problematic for three reasons. First, St. Floret was a rural setting with fairly limited contact with the larger and more prestigious (not to

---

[21] Paul Deschamps and Marc Thibout, *La peinture murale en France au début de l'époque gothique de Philippe-Auguste à la fin du règne de Charles V (1180-1380)* (Paris : Centre National de la Recherche Scientifique, 1963), 226.

[22] This codex is now in the British Library Add MS 12228. Loomis & Loomis, *Arthurian Legends,* 57-58.

[23] I question the Neapolitan attribution of Add MS 12228 because now many of the manuscripts that Avril, Deschamps, and Thibaut in *Les manuscrits enluminés d'origine Italienne*. Tome II, XIIIe siècle (1984) that were attributed to the South have now been identified as manuscripts from the Pisa-Genoa axis.

[24] Luyster, "Courtly Art," 90-91, fn. 189.

[25] Margaret R. Scherer, *About the Round Table* (New York: Metropolitan Museum of Art, 1945), 15.

[26] Whitaker, *Legends,* 66-67.

[27] "Sabatons" were a part of the knight's armor that covered the foot and were usually tapered.

[28] Luyster, "Courtly Art," 128.

mention "fashionable") courts of Avignon and Paris. Hence, perhaps what was considered fashionable at St. Floret was no longer so in the more cosmopolitan courts. Secondly, it is quite possible that the artists of St. Floret intentionally painted the costumes, hairstyles, and armor of the past to create a sense of nostalgia for ancient tales of past heroes. In other words, perhaps the artists at St. Floret intentionally portrayed their characters in antiquated styles to remind their readers that these stories happened long ago, but also that the legacy of these great men should not be forgotten. Lastly, if the fresco cycle of St. Floret was strongly influenced by a particular manuscript such as Add MS 12228, as the Loomises indicated, it is possible that the Lord of St. Floret had a manuscript of Rustichello's *Compilation* from the same scriptorium that produced Add MS 12228. If this is the case, the Italian artist(s) of St. Floret may have merely taken scenes and pictorial elements from the images they found in a manuscript and then proceeded to place these images on the walls of the château at St. Floret.

Despite her detailed analysis of costume and hair, Luyster is willing to consider a date later than 1350 for the frescoes.[29] In fact, due to their aristocratic nature and the courtly imagery in the fresco cycle of St. Floret, many scholars have tried to attribute them to the Duc de Berry, who was in the Auvergne after 1370. The attribution to the Duc de Berry has been contested by Luyster but supported by Courtillé, and historically speaking, the period of the Hundred Years' War (1337-1453) seems a likely candidate for the date of the fresco painting.[30] This is evidenced by the extreme bellicosity of the majority of images of the fresco cycle. In fact, the majority of the images at St. Floret are knights fighting other knights or looking for other knights to fight, with the exception of the Tristan-Iseult-Mark orchard scene, which is not from the *Compilation* and is a "love" rather than a fighting scene. And whether the context is the Crusades or the

[29] Luyster, "Courtly Art," 90-91.

[30] Anne Courtillé, *Histoire de la peinture murale dans l'Auvergne du Moyen-Âge* (Brioude: Watel, 1983), 139 and Luyster, "Courtly Art," 2 and 230-231.

Hundred Years' War, it seems that the idea of having a behemoth of a knight who always wins (Branor le Brun) and a steadfast friend/lover (Tristan) was particularly appealing to audiences in both the thirteenth and fourteenth centuries.

TROUBLED TIMES IN THE AUVERGNE

At the time the frescoes at St. Floret were executed (1350-80), there was considerable chaos in northern Europe: the papacy's move to Avignon (1309-78), the Hundred Years' War (1337-1453), and waves of plague (1348-53). I believe that all of these events could have impacted what is depicted in the fresco cycle at St. Floret. When the fresco cycle was painted (1352-56), the first wave of the Black Death had just ceased, so perhaps during this period of relative calm the Lord of St. Floret had the time to embellish his château. At this time, the patron of the fresco cycle at St. Floret, Athon de St. Floret, probably recruited Italian artists from Avignon. Nonetheless, the Hundred Years' War with the English was a continuous preoccupation of all the French in this time period. However, it must be remembered that the English were not exactly strangers in France. At its fullest extent, the Angevin Empire comprised most of western France and the Atlantic seaboard. Normandy, Maine, Touraine, Brittany, Anjou, Poitou, Limousine, Saintonge, Périgord, Quercy, Gascony, and the Agenais all once belonged to the English.[31] Most of these lands were lost (or won back, depending on whose side one was on) by King Phillip II of France in the mid-thirteenth century. The Angevins had a special affinity for Arthurian myth and romance, and the transmission of Arthurian legend to Italy has confidently been linked to the Norman conquest of southern Italy in the eleventh century.[32] With intermarriage, constant warring, and trade, the vast network for the movement of manuscripts

[31] M.G. A. Vale, *The Origins,* 11.
[32] See M. Whitaker, *Legends,* 53.

from country to country and from court to the countryside extended even more.[33] Moreover, there was significant trade between France, England, and Italy, especially with the Genovese and the Pisans. And, lest we forget, Rustichello was imprisoned in Genoa (1284), and he was most likely from Pisa. Hence, perhaps the Lord of St. Floret received or heard of the tale of Branor le Brun from a visiting Pisan or Genovese merchant and proceeded to have this tale emblazoned on the walls of his home.

The second half of the fourteenth century was a period of crisis in the Auvergne region due to constant warfare and marauding bands of mercenary soldiers. It is estimated that half the inhabited villages in the Auvergne region were abandoned in this period.[34] Furthermore, the region of the Auvergne was a meeting ground between two different civilizations to the north and south, and it was a place of linguistic, juridical, and institutional transitions.[35] City building in the Auvergne region was a slow process, and the villages that formed here were due to the exigencies of local lords to defend the small clusters of people in their fiefs.[36] The Auvergne, like the Midi, was a web of feudal fiefs that could also be inherited by women. Hence, in the space of a few generations, a château could be inherited by multiple minor lords who could also be the rulers of other minor fiefdoms through marriage or inheritance that might be quite distant from one another.

This of course led to internal confusion which was exacerbated by the fact that the fiefs were often defenseless, since they did not have standing military units. Then again, it does not seem that the small fiefs could truly rely on help from the Crown when faced with crises.[37] As

---

[33] M. Whitaker, *Legends*, 63.
[34] Michel Aubrun et al., "Le Moyen Âge," 223.
[35] Ibid., 222.
[36] André-Georges Manry, *Histoire de l'Auvergne* (Toulouse: Privat, 1974), 192.
[37] Manry, *Histoire de l'Auvergne*, 21.

historian John Bell Henneman states, in the Auvergne "we continue to hear only of locally equipped troop contingents," and not much help from Paris.[38] This is especially true during the Hundred Years' War, when "the periods of royal incapacity were much shorter, but while they lasted they may well have contributed to the increased local particularism among the towns and the revived power of certain feudal princes."[39] It is quite possible that Athon de St. Floret, who was most likely the commissioner and patron of the fresco cycle at St. Floret, actually became more powerful during the Hundred Years' War. In fact, Athon was probably a fairly independent lord since his fief was so far from Crown rule in Paris; hence, his fief probably enjoyed a high level of autonomy.[40]

Each rural community had an autonomous administration after the thirteenth century, but due to the instability of the fourteenth and fifteenth centuries, lordships over fiefs were reworked, completely destroyed, or shared by more than one lord. Increasingly, both the large and small châteaux in the Auvergne became less defensive fortresses and more like rural pleasure villas for the middle and upper classes.[41] Because these villas were for "pleasure," it stands to reason that the art inside them would be in line with what their patron found pleasing, which could explain why the art inside these châteaux became more profane and less religious in nature. Who wants to have a dinner party with martyred saints or an anguished Christ staring down at them, when instead one could have errant knights and beautiful ladies? Again, the Auvergne was not frequented much by royals of the French court, and instead was ruled by many different minor lords and vassals who owed allegiance to the Crown but were more reliant upon local nobles for

---

[38] John Bell Henneman, Royal *Taxation in Fourteenth Century France; the Development of War Financing, 1322-1356* (Princeton, NJ: Princeton University Press, 1971), 298.
[39] Ibid., 254.
[40] For the autonomy of feudal lords, see Anne E. Duggan, *Salonnières, Furies, and Fairies: The Politics of Gender and Cultural Change in Absolutist France* (Newark, DE: University of Delaware, 2005), 28.
[41] Manry, *Histoire*, 182.

help resolving any problems that might arise in their small fiefs.[42] Hence, Athon de St. Floret had a fairly autonomous rule of his village and could have whatever subject he liked painted on the walls of his château.

Despite having pleasurable paintings to delight the eye at St. Floret, Athon also had to face huge problems affecting the Auvergne region. First and foremost were the constant bouts of plague that afflicted the Auvergne (and all of Europe for that matter). There are conflicting accounts of how much of the Auvergne region was affected by the plague. André-Georges Manry says that although there were bouts of plague in the Auvergne region in 1348-49, 1360, and 1383, this region as a whole suffered less from the plague than other European nations.[43] However, Ole Benedictow states that the Black Death approached France's borders both in the north and the east by the end of 1348, and then expanded inland in 1349.[44] The Auvergne, according to Benedictow, was struck by the plague from a contagion moving up from the south that reached the most peripheral areas in France sometime in 1351 or 1352.[45]

Both Manry and Benedictow complain of the lack of preserved chronicles from the Auvergne region that would help historians gauge the actual mortality rates there. Benedictow notes that the community of St. Flour, about 48 miles directly south of St. Floret, lost about 48% of its population, but some towns and villages in the Auvergne went virtually unscathed by the Black Death.[46] Was St. Floret one of the villages untouched by the plague? Unfortunately, due to the lack of documentation, we do not know to what extent St. Floret was affected by the plague,

---

[42] The closest that Edward I, to whom the *Compilation* was dedicated, got to St. Floret on his way home from the Crusades was St. Georges d'Esperanche (118 miles from St. Floret), which was in the domain of the Savoyards. Perhaps a version of the *Compilation* was performed or recorded here and remained in the collective memory of the country gentry of the area.

[43] Manry, *Histoire*, 193-94. In the Auvergne, the average mortality rate from the plague ranged from 25-30%.

[44] Ole Jørgen Benedictow, *The Black Death, 1346-1353: The Complete History* (Woodbridge, Suffolk, UK: Boydell, 2004), 109.

[45] Benedictow, *The Black Death*, 109.

[46] Ibid., 335 and 109.

but Manry estimates a mortality rate of 25-30% of the total population in the Auvergne.[47] Nonetheless, Benedictow's methodology seems sounder because he used tax registers for his assessment of the death rate from the plague in Auvergne. Benedictow also very astutely notes that it is difficult to estimate the exact rates of death in this region because many of the people from here did not pay taxes, and hence were not recorded in these ledgers.[48]

Although the Black Death did affect the Auvergne region, it was much less severe here than in other regions in France and in Europe as a whole. However, what did affect the Auvergne was the prolonged fighting of the Hundred Years' War. It was not any one pitched battle that devastated the region, but the marauding bands of mercenary soldiers fighting for hire for both the English and French that wreaked havoc on this rural area. After 1355, the Auvergne region was infested with mercenaries, and the seigneurial governments had to assume the role of protectors of the commoners in their domains. Auvergne was ideal for raiding parties because it offered many fortified shelters for marauders.[49] Hosts were responsible for their guests, and as Jean-Pierre Leguay suggests, local lords and hosts were like an auxiliary police force, the municipal lords often disarming their visitors to avoid trouble and to help in the surveillance of their roads.[50] However, this policing action seems to have been to little avail when the invading English troops of Edward III came to the Auvergne region. In the summer of 1356, the Black Prince (King Edward III's son) was at Issoudun, which is only 74 miles from St. Floret. The

---

[47] Manry, *Histoire*, 193-94.

[48] Benedictow, *The Black Death*, 335, and summarizing the previous work of Boudet and Grand written in 1902. See Marcellin Boudet and Roger Grand, *Etude historique sur les épidémies de peste en Haute-Auvergne* (Whitefish, MT: Kessinger Publishing, 1902), 138.

[49] See Josiane Teyssot, "Pouvoirs et contre-pouvoirs politiques en Auvergne durant l'apanage de Jean de Berry, 1360-1416," in *Actes des congrès de la Société des historiens médiévistes de l'enseignement supérieur public. 23e congrès Brest* (Paris: Publication of the Sorbonne, 1992), 24.

[50] Jean-Pierre, Leguay, "La rue : Élément du paysage urbain et cadre de vie dans les villes du royaume de France et des grands fiefs aux XIVe et XVe siècles," in: *Actes des congrès de la Société des historiens médiévistes de l'enseignement supérieur public, 11e congrès, Lyon,* 11, no. 1 (Paris: Publication of the Sorbonne, 1980), 51.

Black Prince and his men ravaged the prosperous Auvergne region.[51] The mercenaries finally disbanded and left the Auvergne in 1387 with the signing of the Treaty of Brétigny.

To avoid trouble and protect his guests, the Lord of St. Floret probably also disarmed those guests as they were shown into the great reception hall filled with the fresco cycle. The viewer of the fresco would first be struck by the bellicose images of the unbeatable Branor le Brun. This served a twofold purpose. Firstly, with these images, the Lord of St. Floret was trying to make a statement of their opulence, but at the same time, an underlying threat about what would happen to those who did not follow the rules. I view the frescoes at St. Floret as a statement by the local lord of his power and prestige, with a hint of the violence that could ensue if he was provoked. Anne Courtillé believes that the frescoes at St. Floret could have been painted in the context of the Hundred Years' War but after the Treaty of Brétigny, because the lord here wanted to use popular courtly literature to show how important the valor of arms was.[52]

Athon de St. Floret was most likely responsible for the fresco-painting here. Although Athon never fought for either the French or the English in the Hundred Years War, it seems that he still wanted to be included in an idealized past of great warriors. Athon died in 1365, and little is known about his day-to-day life. Hence, I surmise that the fresco cycle was painted after 1352 (when the Black Death was at bay), but before the spring of 1356 (when the Black Prince and his soldiers and mercenaries started their destruction in the Auvergne). From 1352 to early 1356 there was a period of general calm in the Auvergne region, and since the majority of the scenes

[51] Bell Henneman, *Royal Taxation,* 302.

[52] Anne Courtillé, "La peinture murale en Auvergne au temps de Jean de Berry," in *Le palais et son décor au temps de Jean de Berry,* pt. 4, ed. Alain Salmagne (Tours: Presses Universitaires François-Rabelais, 2010), 197.

THE CHÂTEAU AT ST. FLORET

The château at St. Floret was constructed in the late thirteenth century/early fourteenth century at a time when seigneurial châteaux were being built, usually close to a road or a priory.[53] It was common for thirteenth-century minor lords of the Auvergne to build large defensive châteaux often isolated in the rural countryside. The defensive purposes of these villas were limited; again, they seem to have been built more for prestige and pleasure rather than defense.[54] When Robert IV du Crest married Philippa de Courcelles in 1283, Philippa was given the rights to the fief of St. Floret (1294). Robert and Philippa's son, Athon de St. Floret, inherited this fief from his mother in 1314. Moreover, most scholars maintain that the frescoes were painted under Athon's lordship (1350-1365). However, I would narrow this date even more to between 1353 and early 1356—that is, after the onslaught of the Black Death but before the invasion of Edward III in the region. Athon was a knight to Bertrand de la Tour, the Dauphin of nearby Champeix. The De la Tour family had ties to Avignon and Paris, and as Luyster has demonstrated, there are documents that record Athon's travels outside of St. Floret to nearby Avignon and also to Paris in the entourage of the De la Tour family.[55] Nonetheless, Athon's primary residence and life were in the idyllic village of St. Floret, where he died and was buried at the old church there (*le Chastel)* in 1365 [Figure 9].

---

[53] Aubrun et al, "Le Moyen Âge," 224.
[54] Ibid., 226.
[55] See Luyster, "Courtly Art," 96, fn. 193, and 117-120. Here she mentions Athon's travel to Paris in 1328 and also to Avignon in 1353.

Figure 9: Le Chastel (old church) of St. Floret. Florea, 2015.

St. Floret is, and probably always was, a small, sleepy village in the center of France [Figure 10].

Figure 10: Map of France indicating location of St. Floret. Source: Pixabay. Digital Image. Available from: https://pixabay.com/en/map-of-france-translated-into-french-1290907/ (accessed July 02, 2016).

Although Luyster claims that "St. Floret was a busy village in the fourteenth century . . . its position on a major trade route allowed it to welcome visitors from far away, "[1] topographical evidence shows that St. Floret was too far away from major and minor trade

[1] Luyster, "Courtly Art," 10.

routes to support this hypothesis. St. Floret is about 19 miles south of the larger city of Clermont-Ferrand and 106 miles south of Lyon. Although both Clermont-Ferrand and Lyon were on minor and major (respectively) trade and pilgrimage routes directly north of St. Floret, St. Floret was a hard day's walk from even the closer of these [see Figure 11].

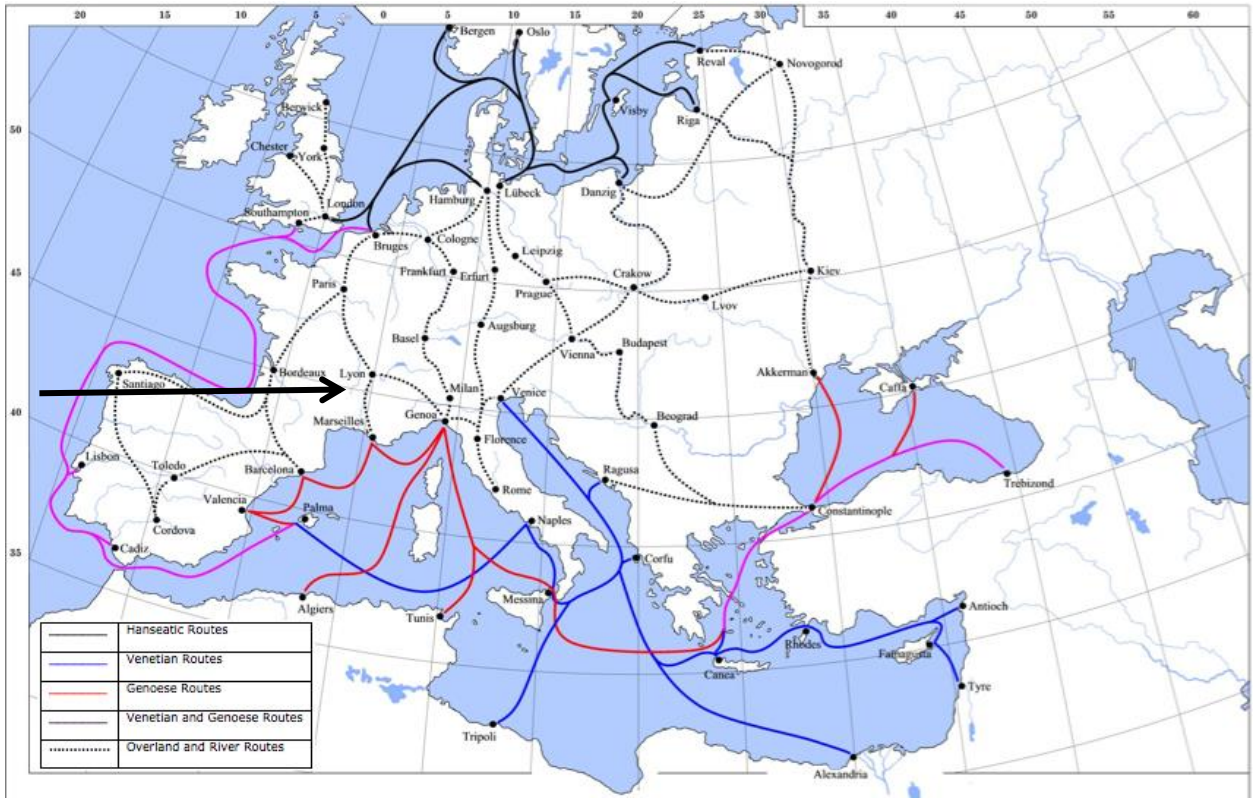

Figure 11: Trade routes in Europe: Arrow indicates location of St. Floret. St. Floret is 106 miles south of Lyon and 226 miles north of Marseilles. Source: Wikimedia Commons. Digital Image. Available from: https://upload.wikimedia.org/wikipedia/commons/e/e1/Late_Medieval_Trade_Routes.jpg (accessed July 02, 2016).

Luyster states incorrectly that St. Floret was near the minor medieval road called the *Voie Regordane*; the village was actually about 65 miles away from the starting point of the *Voie Regordane* at Le Puy, which is to the south of St. Floret.[1] Hence, St. Floret was never (as far as my research can ascertain) on a major or minor trade or pilgrimage route. To reach St. Floret, a traveler would have to travel an additional 1-2 days off the secondary road leading south from Clermont-Ferrand and go 8 miles west of the city of Issoire.[2] Unless the traveler had a specific reason to go to St. Floret, there is no logical explanation as to why one would.

St. Floret was probably self-sufficient because of its agricultural products and position on a river, but, as Michel Aubrun laments, there is no in-depth study of how the various villages in the Auvergne earned their livelihoods.[3] Since St. Floret is on the Couze Pavin river (a tributary of the Allier), the lords of St. Floret probably collected *péages* (taxes on goods and travelers) to cross their bridges and proceed through the fief of St. Floret[4] [see Figure 12].

---

[1] The *Voie Regordane* was the fourth most important pilgrimage route in Christendom during this era, bolstered by its strategic position as a point of departure for Santiago de Compostela, the Holy Land (St. Gilles was a port at the time) and Rome.

[2] Margaret Labarge estimates that traveling distance per day in the thirteenth century was about 15 to twenty miles, but a sole rider on a good horse could travel up to 55 miles per day. M. Labarge, *Mistress, Maids and Men: Baronial Life in the Thirteenth Century* (London: Phoenix, 2003), 156-57.

[3] M. Aubrun et al. "Le Moyen Âge," 227.

[4] Gabriel Fournier, *Le château dans le France médiévale: essai de sociologie monumentale* (Paris: Aubier Montaigne, 1978), 162, and also Michel Estienne, "Le pouvoir partage: la basse Auvergne de 1150 à 1350" (Positions de thèses de l'Ecole nationale des Chartes, 1986), 33.

Figure 12: Couze Pavin River and medieval bridge in St. Floret. Florea, 2015.

These taxes helped maintain the roads and keep the bridges functional for future use.[5] But despite this, the revenues from these taxes would have been modest, and hence St. Floret must have had an external source of income.[6] How and why the family at St. Floret dedicated so much time, energy, and funds into the painting of the fresco is a mystery, and will remain so until a more detailed analysis of the financial and economic situation of the Auvergne is undertaken. Until then, these questions must remain unanswered and subject to speculation.

PHYSICAL DESCRIPTION OF THE CHÂTEAU AND FRESCO AT ST. FLORET

The château which houses the fresco cycle is made up of three levels carved directly into the natural rock at St. Floret. The defensive level once had a covered walkway that crowned the summit of the complex and connected the two bartizans, but is now mostly destroyed; only the one on the northeast corner still exists [see Figure 13].

[5] Leguay, "La rue," 41.
[6] Teyssot, "Pouvoirs," 247.

Figure 13: Modern staircase leading to the entrance of the château in St. Floret. Florea, 2015.

The summit of the château complex and walkway were ruined at the end of the nineteenth century by the elements, which also contributed to the destruction of the rib vault in the upper rooms and to the crumbling of the corbelled turret in the southeast corner of the terrace [see Figure 14].

Figure 14: Back of château with remaining turret. Florea, 2015.

None of the turrets can be restored due to the frequently cascading boulders and overgrowth of trees and vines in the area. Although these bartizans look defensive, they were actually pigeon lofts (dovecotes), confirming that these rural châteaux were more for pleasure than for defense, since only the nobility could own and raise pigeons.[7] The only access to the upper terrace, the donjon, and the residential rooms of the château is a staircase cut directly into the rock of the château complex. The donjon is older than the château (eleventh century) and is part of an older group of buildings (1 *corps de logis*) that is no longer extant [see Figure 15].

Figure 15: Staircase leading to donjon and upper level. Florea, 2015.

[7] Frédérique Havette, *St. Floret: Château à la gloire des chevaliers et de Tristan et Yseult (décor XIVe), Chastel église, tombes rupestres, ossuaire* (Clermont-Ferrand: Imprimerie Couty, 2014), 22.

A church is slightly below the château level, and there is a storage area on the subterranean level of the château. Hence, the group of buildings at St. Floret was self-sufficient, as the complex fulfilled military, agricultural, and religious functions [see Figure 16].[8]

[8] Fournier, *Le château*, 78.

Figure 16: Château complex. Florea, 2015.

On the first floor of the château, we find the ceremonial/reception hall known as the “aula” [see Figure 17].

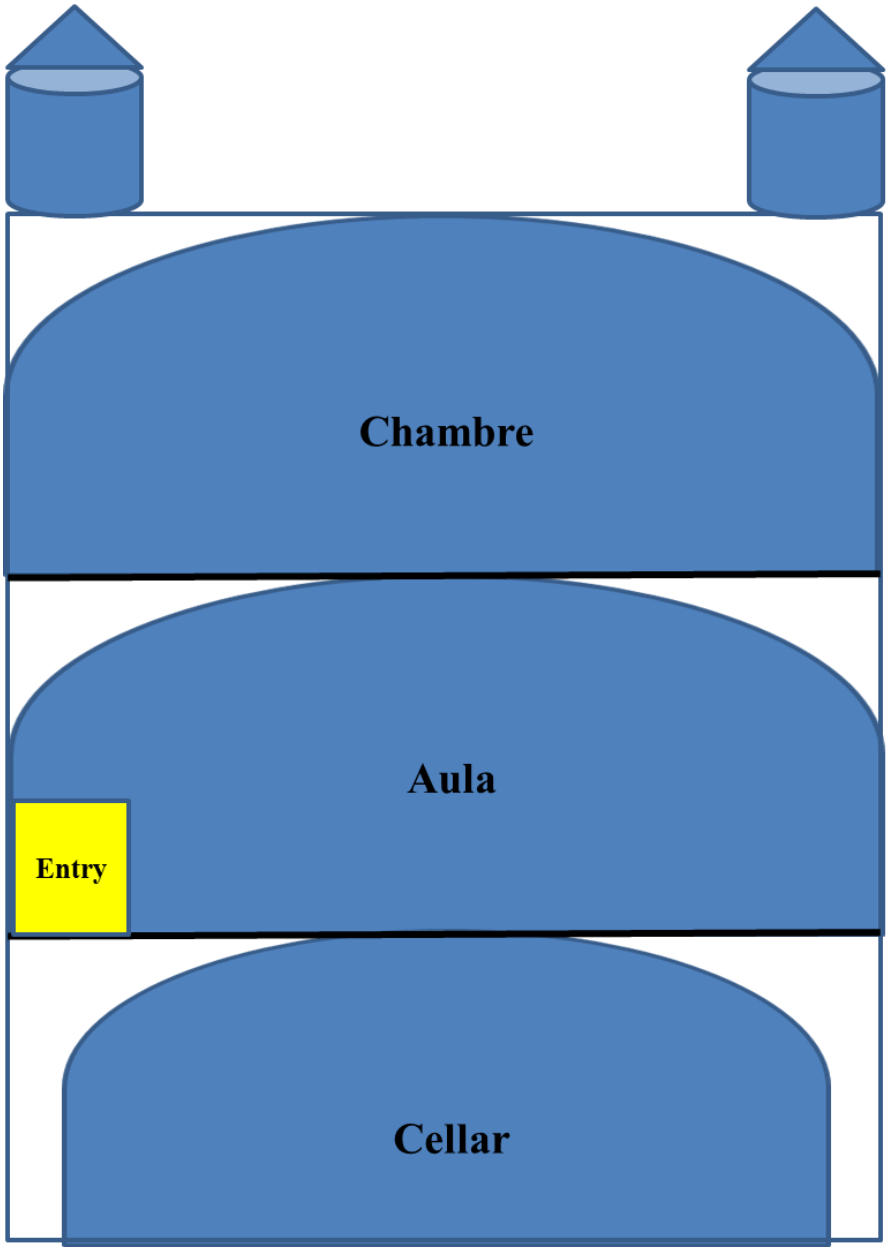

Figure 17: Building set-up of the château where the frescoes are housed. Design by Florea.

Here the lord held audience and feasts, and this is the only room of the château that had such an elaborate mural cycle. Inside the aula there is a rib-vaulted ceiling with twelve ribs with twelve nervures that end in twelve different and carved corbels. These rejoin the nervures to the anthropomorphic keystone painted in gold with a sun/human face [see Figure 18].

Figure 18: Vaulted ceiling of aula with sun keystone. Florea, 2015.

There are also two large window seats, a massive fireplace, and many windows for natural light, all of which would have contributed to the comfort of the room [see Figures 19-20]. The main reception room was where audiences and feasts took place, and it probably once had furnishings such as benches, tables, and chairs. The room still has two large window seats and a fireplace, but the furnishings are now for the most part gone. However, when this room was furnished, it would have allowed the guests at St. Floret to view the fresco cycle at their leisure, perhaps while they waited their turn to approach the Lord of St. Floret.

Figure 19: Monumental fireplace. Florea, 2015.

Figure 20: Window detail. Florea, 2015.

All the weight of the structure is supported by the carved corbels, which makes the framing arches architecturally unnecessary. Furthermore, although each corbel is different, there does not seem to be a viable explanation or logic as to why they are so [see Figure 21].

Figure 21: Example of corbel north wall (queen). Florea, 2015.

The reception room is roughly 30 feet by 30 feet. The floor was made from terracotta tiles, but little of the original flooring remains. Again, this is the room where the various lords of St. Floret distributed seigneurial justice (*haute, moyenne*, and *basse*) over this fief of St. Floret until at least 1606.[492] And the choice of wall décor and architecture was most certainly used to demonstrate the wealth and status of the Lord of St. Floret.

FRESCO AND RUBRIC DESCRIPTION

As we enter the aula of the château, the viewer can follow the story of Tristan or that of Branor le Brun. Luyster suggests that viewers who wanted a "fast" read might choose the Tristan story, because here the abbreviated rubric is shorter. On the other hand, if one wanted a "slow" read, the viewer could choose the story of Branor le Brun, whose rubrics are much longer (this is supposition because they no longer exist).[493] The registers of the fresco are separated horizontally by painted corbels in trompe l'oeil, and vertically by the ribs of the vaulted ceiling that section off each episode, much like a newspaper comic strip. Luyster argues that the fresco cycle should be read from left to right, depending on whether the reader chooses to follow the upper register with the story of Tristan, or the lower register which follows the story of Branor le Brun.There are six scenes on each wall, for a total of twenty-four scenes. Only eleven can still be seen today, and many of these are in rough shape (especially on the south wall). The bottom third of the walls was once decorated in faux brick motif with a greyish border.[494] The vaults were once painted white with red bands and stars. The fresco scenes in the aula are found on the upper

---

[492] Dessert, "Recherche," 141.

[493] Luyster, "Courtly Art," 189. The Branor le Brun rubrics on the lower register have never been recorded, as they were probably already too damaged by the nineteenth century for Dauvergne to record them. Many more of the Tristan rubrics on the upper register are still extant.

[494] Véronique Marthon, "Étude du patrimoine médiéval (V^{e}-XVe siècle) de la paroisse de Saint-Floret (Puy de Dôme," Mémoire de Maîtrise sous la direction de Anne Courtillé et Bruno Philip (U.F.R. Clermont II, Clermont-Ferrand, 2000), 148, 196.

two-thirds of the walls and are organized into two superimposed registers. The entire aula was probably painted at one time, but today all that remains are the frescoes on the north and south walls with a small portion of fresco on the left-hand corner of the east wall. Nothing remains of the frescoes on the west wall. The best-preserved frescoes are on the north wall and pertain to the story of Branor le Brun and the Tristan/Palamedes/Galehout story [see Figure 22].

Figure 22: Best-preserved scene on north wall. Tristan and Palamedes (upper register) and Branor le Brun (lower register). Florea, 2015.

Only twelve Arthurian mural cycles still survive *in situ* today in all of Europe. Most of these fresco cycles are dated later than the Arthurian cycle at St. Floret, and none have the large

rubrics that we see here above the trompe l'oeil receding corbels. The oldest extant series of Arthurian murals is the Yvain cycle, executed at Rodeneck (also known as Rodenegg/Rodengo) Castle near Bolzano in the Italian Tyrol (c. 1220).[495] Other fresco cycles include that in the Palazzo Richieri in Pordenone (c. 1350), the Tristan wall-paintings at Runkelstein (also known as Roncolo/Schrofenstein, c. 1380), the courtly fresco at the Castelvecchio in Verona (c. 1350), the painted ceiling at the Palazzo Chiaramante 'Lo Stiri' (Palermo, c. 1380), the Arthurian rooms in Frugarolo (Piedmont, c. 1390), the Manta Lancelot frescoes (Piedmont, c. 1420,; and the "Sala di Pisanello" in Mantua (c. 1436). It seems that Italians (especially northern Italians) liked Arthurian representations on the walls of their manor houses and castles. However, no known fresco cycle is stylistically similar to the fresco at St. Floret, and none has the extensive and large rubrics found here.

With the exception of the Loomises and A. Luyster, the St. Floret fresco cycle has been studied only by French art historians. There are numerous brief references to the cycle in books on fourteenth-century French painting in the Auvergne, but these are filled with inaccuracies in the interpretation of the fresco cycle. The misinterpretations of the fresco cycle are due to the dismal condition of the fresco (with the exception of the north wall), lack of literary knowledge, closed interpretations of the fresco cycle (only Tristan), and a non-global approach (i.e., the fresco cycle is strictly speaking only French, painted by French artists in the French language, and in France).[496]That is to say, most negate the international influences of the fresco and label it as a strictly French cultural product. Usually art historians try to link the frescoes at St. Floret to the fourteenth-century Parisian court or attribute the frescoes to noble French patrons in the

[495] Whitaker, *Legends*, 124.
[496] Allaire, "Arthurian Art," 215.

vicinity of St. Floret, or they connect the frescoes to the political situation at the time.[497] In fact, many past scholars have tried to attribute the fresco cycle to the Duc de Berry, who was given the duchy of Auvergne in 1360 and was well known for his patronage of the arts.[498] Many have noted the uniqueness and complexity of the images of the fresco cycle at St. Floret and tried to compare it to similar frescoes such as the mural narrative at the Castelvecchio in Verona, or the frescoes painted in Avignon at the *Livrée* Ceccano. And although critics and historians might find one or two stylistic elements that bolster their theories on the fresco cycle at St. Floret, most limit themselves to describing its singular "uniqueness."

The Italian influences on the frescoes at St. Floret are found in the naturalistic elements (easily identifiable trees), perspective, massive figure types, use of trompe l'oeil in the frieze, faux architectural motifs, and "Italianate" use of soft blues and pinks.[499] Similarly, it seems that the use of *chiaroscuro* was also a direct influence from Italian-style paintings. In contrast to many others, Luyster hypothesizes that the artist of the fresco at St. Floret was Matteo Giovanetti (or an artist or artists from his workshop), who worked in the Chapel Saint-Martial at the Palais des Papes in Avignon.[500] We know that Matteo Giovanetti was working at La Chaise-Dieu in the Auvergne region about 50 miles south of St. Floret.[501] St. Floret is physically much closer to Avignon than to the royal courts of Paris (170 miles vs. 260 miles), and this could be the reason why the fresco cycle at the château has architectural and pictorial elements similar to art and architectural works found in Avignon, especially the palace of Cardinal Annibale Ceccano *(Livrée* Ceccano) and the Palais des Papes. Luyster notes that Athon de St. Floret was witness to

---

[497] For more on French courtly art in the fourteenth century, see Porcher, Meiss, Avril, Donzet & Siret, De Winters, Alexandre-Bidon, Deschamps, Courtillé, Marthon, Dessert, and Balouzat in the bibliography of this dissertation.
[498] See Courtillé (1983), *Histoire,* 183, and Marthon, "*Étude," 207*.
[499] Luyster, "Courtly Art," 101.
[500] Ibid., 116-117.
[501] Michel Laclotte and Dominique Thiebaut, *L'école d'Avignon. Ecoles et mouvements de la peinture* (Paris: Flammarion, 1983), 37.

a dowry contract in Avignon in 1353 and would have had the opportunity to observe the buildings and paintings being commissioned in the papal city.[502] Perhaps Athon invited a few Italian artists home with him after he concluded his business in Avignon, setting them to work on the fresco at St. Floret.

The rubrics at St. Floret are distinctive because instead of merely giving the names of the Arthurian characters depicted, as in most mural and manuscript representations of Arthurian matter, they also offer large, abbreviated textual blocks from what Roger Sherman Loomis and Laura Hibbard Loomis have positively identified as Rustichello da Pisa's *Compilation.*[503] More specifically, these rubrics come from the oldest known version of Rustichello's work preserved in BNF MS fr. 1463 (1290-1310). For manuscript comparison to the fresco cycle at St. Floret, one must use manuscripts that predate the fresco cycle (c. 1350-1365). The only possible candidate besides MS fr. 1463 is the Viterbo fragment, which slightly predates MS fr. 1463 (c. 1290) itself. However, the Viterbo fragment is only a couple of lines from the Tristan section of the manuscript, and due to its fragmentary nature, it is not well-suited for comparative purposes. I surmise that the schematic plan of the fresco cycle follows almost exactly how Rustichello relays the Brunor and Tristan episodes in MS fr. 1463, with a few deletions or scene combinations and the addition of one episode from Béroul's prose work *Tristan*. Hence, I propose a slightly different schematic plan than those that previous authors such as Luyster have

[502] Luyster, "Courtly Art," 119.

[503] Generally, when there are no rubrics, the onlooker is guided by inscriptions giving the names of characters and places, in full or in abbreviated form (Paris, BnF MS fr. 760), but rubrics and inscriptions may appear together in the same manuscript (Paris, BnF MS fr. 1463). The illustration of a single episode may extend over several folios, such as the triple sequence of Tristan's fight with Morholt (London, BL, Harley 4389, ff. 17, 18, 18v); or the five scenes of Tristan's encounter with Lancelot at the Perron Merlin (Paris, BnF MS fr. 1463. Ff. 17, 17v, 18, 18v, 19); (see Jacqueline Thibault Schaefer , "The Discourse of the Figural Narrative in the Illuminated Manuscripts of Tristan (c. 1250-1475)" *in Word and Image in Arthurian Literature,* ed. Keith Busby (New York and London: Garland Publishing Inc., 1996), 178-79.

given. In this plan, the artist at St. Floret follows exactly the sequence of events as found in MS fr. 1463 or a manuscript quite similar to it [see Figures 23 and 24].

Figure 23: Schematic plan of fresco cycle

(Extant images and rubrics)

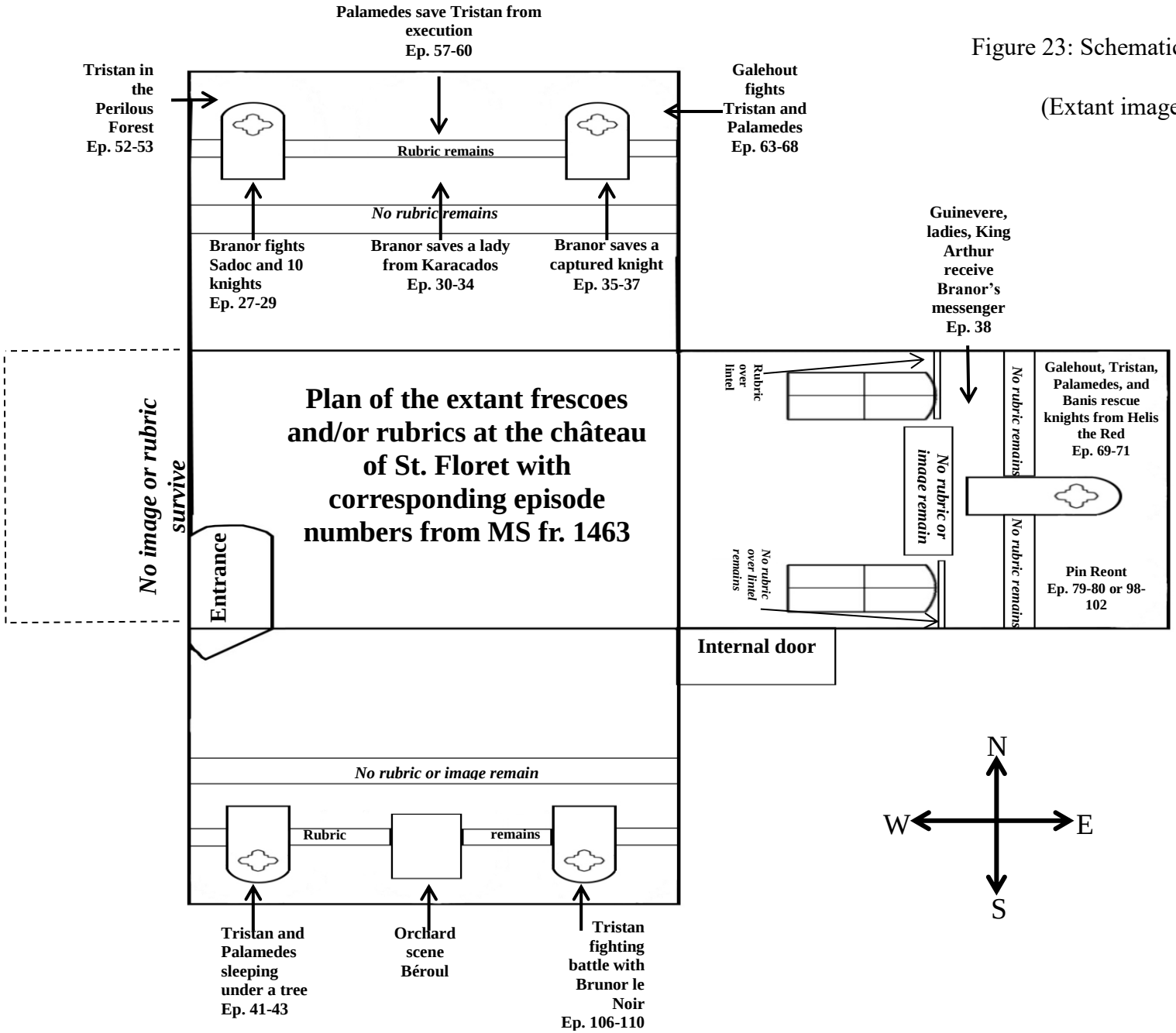

Figure 24: Projected plan of the fresco cycle at St. Floret

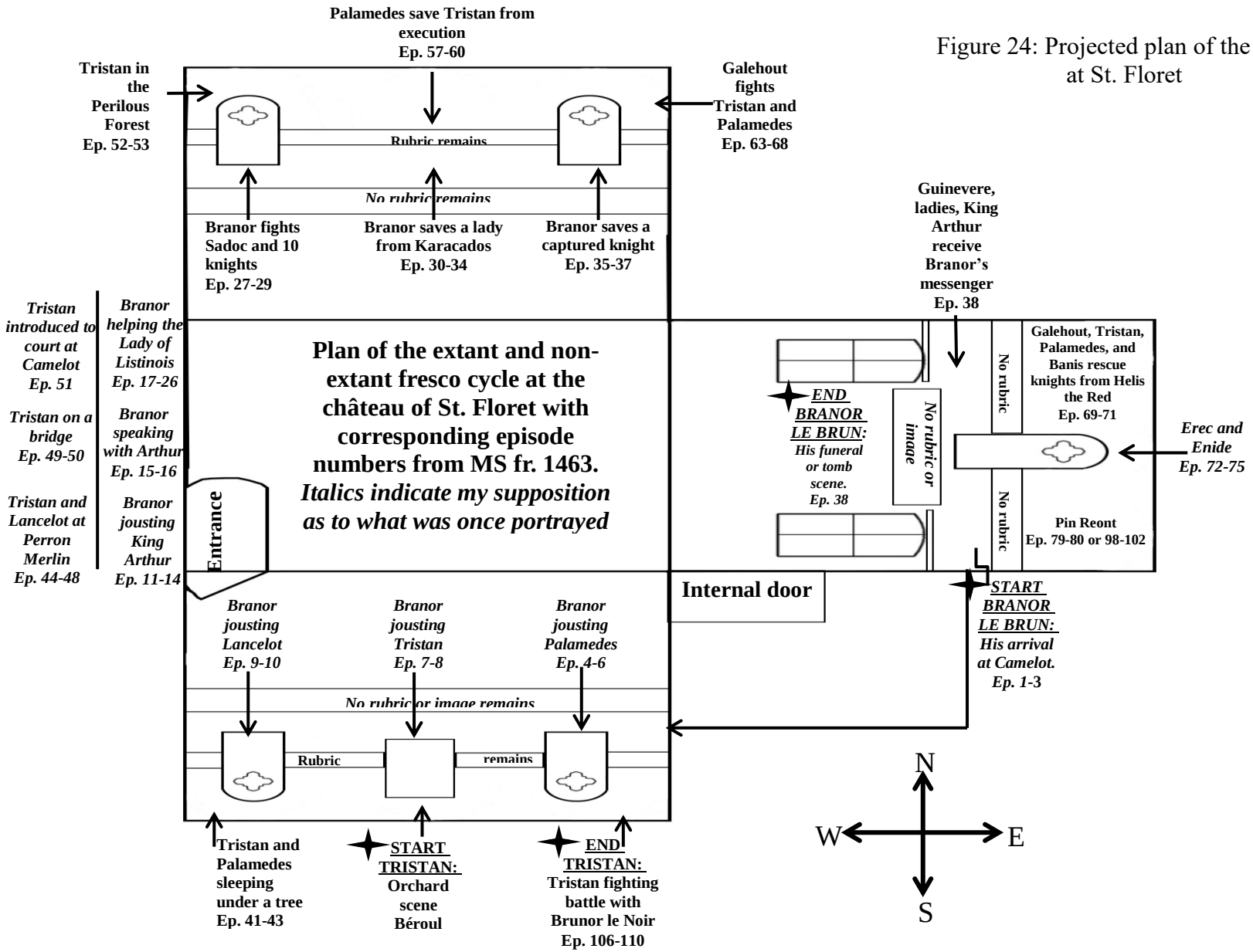

It is possible to use the remaining images and fragmentary rubrics to piece together the stories of Tristan and Branor le Brun, and also to identify which manuscript is most similar to the one used at St. Floret. Since MS fr. 1463 is the manuscript closest to the probable date of the painting of the fresco cycle, I believe that I can prove that it (or a manuscript quite similar to it) was the source for the inspiration of the fresco cycle here. Here is a brief listing of the images with corresponding rubric numbers from MS fr. 1463 (for full rubrics and painting descriptions, see Table 1 (Branor) and Table 2 (Tristan).[504]

INTERPRETATION OF LOWER REGISTER (BRANOR LE BRUN CYCLE)

Although partial rubrics remain of the upper or Tristan register of the fresco cycle, the lower or Branor le Brun register was read by longer rubrics of fourteen lines, written in much smaller letters. All that remains of these legends is a small fragment on the right side of the north wall, which is now illegible [Figure 25].

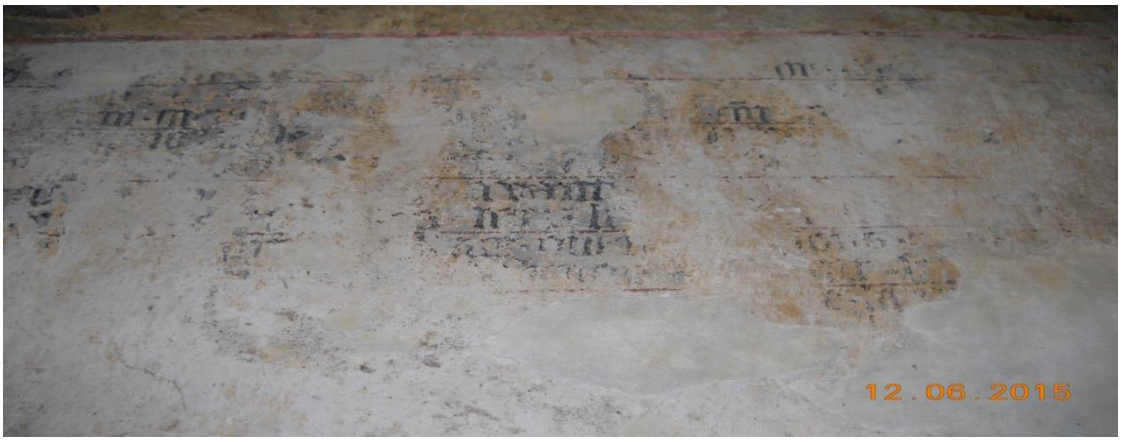

Figure 25: North wall lacunal rubric for Branor le Brun. Florea, 2015.

[504] Luyster, "Courtly Art," 170-173. In these pages, Luyster compares the images at St. Floret with the images in the manuscript of MS fr. 1463. She found roughly 25% of similar images overlap between manuscript and fresco cycle. However, I have found that following the actual text in the manuscript and not solely the images portrayed gives a more plausible synopsis of the fresco cycle order at St. Floret.

The only sections of the Branor register that exist are three panels on the north wall and a small fragment on the right-hand side of the east wall. Again, the tales of Branor le Brun consist of 39 episodes in the *Compilation*, and most of these involve him jousting with other knights. The last episodes in the manuscript (Episodes 38-39), show Branor's return home and his sending a message to King Arthur, where he finally reveals his name and history. The small fragment on the east wall shows three ladies on a castle rampart, and one can make out the crowned head of a bearded man. This is almost certainly Guinevere and her ladies, and the bearded man is probably her husband, King Arthur. Loomis states that "Dauvergne describes this scroll as attached to a scene in which three ladies and an old man appear," but "this scroll" is no longer visible.[505] We can assume here that King Arthur (the bearded man) receives a message informing him and the court at Camelot of who it was who bested all the knights on the fateful feast of Pentecost (Episode 38 left-hand panel, east wall). So, working backwards, one can surmise that the next scene would be the funeral of Branor le Brun or King Arthur having Branor's adventures recorded in a book (Episode 39 central panel, east wall). After that, on the right-hand side of the east wall, it seems logical that this scene would portray Branor's arrival in Camelot, since there are no more episodes of the Branor le Brun story left to portray.

After his arrival in Camelot, Branor fights and bests twenty-nine different knights. Since there was not enough wall space to portray every single combat episode, I hypothesize that the artist at St. Floret probably combined these episodes on the south

[505] R.S. Loomis & L. Hibbard-Loomis, *Arthurian Legends,* 59.

and west walls and made individual scenes for the most important knights such as Tristan, Lancelot, and King Arthur. Hence, I contend that on the left-hand side of the south wall, there was probably an amalgam of knights fighting Branor in the first scene (Episodes 4-6). The central panel probably showed Branor jousting with Tristan (Episodes 7-8), which would make a fine contrast to the Tristan and Iseult scene on the upper register, creating a dichotomy between Tristan the victorious lover (upper register) and Tristan the defeated warrior (lower register). The right-hand panel probably showed Branor jousting with Lancelot (Episodes 9-10), which would contrast with Tristan sleeping under a tree next to his sometime friend and sometime enemy Palamedes on the upper register. As a whole, this section of the south wall probably represented the rivalry/friendship specifically regarding Tristan because it portrays his dearest friends and worst enemies (i.e., Palamedes, Lancelot, and Branor) on the same section of the wall.

The likely content of the west wall is a completely speculative, since nothing remains of it. On the left-hand side there was probably Branor jousting with King Arthur (Episodes 11-14), and in the central scene on the west wall a court scene portraying Branor talking to King Arthur. These scenes on the west wall are directly in front of the scenes on the east wall, in which Branor arrives in Camelot with a finely dressed lady. Hence, I believe these two sets of scenes mirror each other; the west wall depicts Branor's departure from Camelot and the east wall his arrival there. In this scene of King Arthur talking to Branor, the Maiden of Listinois is probably also present, because Branor then leaves with her in the next scene of the *Compilation* and goes to help save her lands and aged mother from the evil count Ghiot. I believe this whole scene could

have been portrayed by having a group of knights fighting in front of a castle (Episodes 17-27), and perhaps in this scene there were also a couple of ladies standing on the ramparts of the castle, which would mirror the ladies found on the east wall (lower register) standing on the ramparts of Camelot.

On the left-hand side of the north wall, we find Branor fighting Sadoc and a group of twenty knights (Episodes 27-29). This is the only scene pertaining to Branor le Brun when he is jousting or fighting without being asked to do so by a lady. In fact, here he is fighting to uphold the laws of chivalry after Sadoc is extremely discourteous and tries to force Branor to fight against his will. Above this scene, in the Tristan register we have Tristan going through the Perilous Forest to save his friends Dinadan and Dodinel from Morgan le Fay. In the central panel, Branor saves a maiden who has been kidnapped by the evil knight Karacados (Episodes 30-34). In the Tristan register, on this section of the wall, Palamedes is saving Tristan from certain death at the hands of an embittered valvassor. Hence, this central panel has rescue scenes in both registers, but the artists seemed to have been more concerned with showing the actual fighting than the act of rescue. On the other hand, Rustichello concentrates more on the marital prowess of the knights than on the actual rescue. Finally, on the right-hand panel on the north wall, Branor saves a knight and the knight's wife, who has been captured by a group of four discourteous knights (Episodes 35-37). In the upper register, we find Tristan and Palamedes fighting Galehout. Lastly, on the left side of the east wall, a messenger arrives at Camelot and informs all of who Branor le Brun is and why he decided to joust against all the Knights of the Round Table and King Arthur (episode 38). The last scene on the

lower central panel of the east wall probably portrayed Branor's funeral, or King Arthur having Branor's adventures recorded by a scribe. Again, the east wall is so fragmentary that one can only make out the three ladies on the castle ramparts [Figure 26].

Figure 26: Guinevere and ladies on castle ramparts in Camelot, east wall (left side), Branor le Brun register, (i.e., lower register). Florea, 2015.

Hence, with some conflation of episodes, it is quite possible that the entire story of Branor le Brun was depicted on the walls at St. Floret.

INTERPRETATION OF UPPER REGISTER (TRISTAN CYCLE)

The upper register, on the one hand, is slightly easier to identify in the episodes from the Tristan section of the *Compilation*. However, there is the added difficulty that there are many more episodes about Tristan in the *Compilation* than there are of Branor le Brun, and many of the Tristan episodes are quite similar. This makes an exact

identification of the episodes from the Tristan section of the *Compilation* slightly more difficult. I believe that the Tristan register starts with the orchard scene taken from Béroul. In this scene, Tristan and Iseult are speaking together under a tree near a pool. The evil dwarf Frocin informs King Mark of their adulterous meetings and tells Mark where to find the lovers. Mark then goes to the garden where Tristan and Iseult will meet and climbs a tree to be out of sight. Nonetheless, Iseult notices King Mark's reflection in the pool and indicates to Tristan that they are not alone. Tristan comments that he will have to go far away from the court at Tintagel to avoid any scandal; he does not say where he will be going but indicates he will go to seek adventure. This scene is portrayed in the central panel of the south wall of the fresco cycle at St. Floret. Rustichello avoids any scurrilous details of the adulterous and incestuous love between Tristan and Iseult in the *Compilation.* In fact, Rustichello states that if someone wants to read about this, they must turn to Robert Boron.[506] Perhaps that is why the painter of the fresco cycle at St. Floret thought it necessary to add the orchard scene from Béroul to one of the segments of the south wall; otherwise the fresco cycle would seem more like an endless procession of knights and jousts. As R.S. Loomis indicates, "the left inscription indicates that its composer had some notion of making the outcome of the tryst the cause of Tristan's

[506] "But who would like to hear the details of this tale would have to take up the book of Sir Robert de Boron, where it is narrated word for word; but I do not want to tell it in this book" (*Et qui cestui conte voudra oïr tot apertemant si preigne le livre monseingneur Roubert de Buron, car cil le devise tot mot a mot, pour ce ne le vuoill je deviser en cestui livre*), see *Il Romanzo*, 197:9.

wandering in the realm of Logres,"[507] and Rustichello does describe Tristan as having newly arrived in Logres in his *Compilation.*[508]

Following the orchard scene on the right side of the south wall, we find the very faded figures of Tristan and Palamedes under a tree scene. This scene corresponds to where and how Rustichello begins the Tristan story (Episode 40) in his *Compilation*. Proceeding to the now blank west wall, there was probably the famous confrontation between Lancelot (whom Tristan thinks is Palamedes) and Tristan at Merlin's Stone (Episode 44-48). Then, there was probably the scene of Tristan defending a bridge from ten knights (Episodes 49-50). Next, with the Branor le Brun register, we are already in Camelot, and there was probably the scene of Tristan's first introduction to the court at Camelot and to King Arthur (Episode 51). This is followed on the north wall by Tristan's leaving Camelot to seek adventure in the world and his encounter with the knights of Morgan le Fay in the Perilous Forest, as depicted on the left-hand side (Episodes 52-53) of the north wall. In the central panel on the north wall we find Tristan being saved by Palamedes from a valvassor who wants to kill him because Tristan killed his son, who was one of Morgan's men [Episodes 57-60]. In the last scene on this wall (right-hand side), we find the story of Galehout, who is forced to fight both Palamedes and Tristan until they decide to become friends (Episodes 63-68). Hence, in these scenes there is

---

[507] R.S. Loomis & L. Hibbard-Loomis, *Arthurian Legend,* 59.

[508] "Now the tale says the Sir Tristan, the son of King Meliadus of Leonois, came for the first time to the realm of Logres in the same year that he had married Iseult of the White Hands. He was riding in the largest forest of the realm of Logres, where it was easy to find an adventure every day" (*Or dit li contes que m. Tristan, le fiz au roi Meliadus de Leonois, estoit venus en romaies de Logres novellement, en celui anz meïsmes qu'il prist a feme Yçelt a Blance Main. Il chevauchoit par une foreste qui estoit la greignor de tot li roiames de Logres, et la ou plus aventure i se trovoit toz jorz*), see *Il Romanzo,* 40:1-2.

much animosity until the knights fight one another and ultimately become friends. This sort of male love-hate relationship continues on the next wall.

On the east wall, left-hand side, Banis, Galehout, Palamedes and Tristan are fighting Helis the Red in order to save their friends, Lamorat and Bleoberis, which is indicated by the rubric, although no images remains here (Episodes 69-71). In the central scene on the east wall, there was probably the story of Erec and Enide, who were being harassed by Lamorat and Bleoberis after they were rescued by Tristan (episodes 72-75), *or* the story of the battles at Arpinel Castle with Givret, Yvain, and the Knight with the Vermilion Shield (Episodes 76-78). On the right-hand panel of the east wall, there was probably the scene(s) of Givret and Yvain fighting the formidable knight at the *Pin Reont* (episodes 79-80), or of Tristan and Palamedes fighting the same knight at the *Pin Reont* (episodes 98-102). There are no surviving images here, but the rubric indicates that the knights are in front of a tower, and the *Pin Reont* is the most important "tower" found in the *Compilation.* The story then proceeds to the left-hand side of the south wall, where Tristan fights with the Knight of the Vermilion Shield, and so ends the Tristan register of the fresco cycle at St. Floret. In the fresco cycle, 96% of the 24 total scenes are most likely taken from Rustichello da Pisa's *Compilation*. That is to say, almost the entire fresco cycle is from a version of the *Compilation* very similar to the text of MS fr. 1463, although the images themselves look more like those found in Add MS fr. 12228.

Rustichello's book must have resonated with the Lord of the château at St. Floret, since they (or their artists) used an abbreviated version of his text to accompany the images painted here. I surmise that the Lord of St. Floret wanted scenes from the most

violent work popular at the time precisely because they were living in violent times. In addition, the Lord of St. Floret probably wanted to demonstrate their cultural level, and hence must have chosen a work *en vogue* in their time. But again, Rustichello's *Compilation* is always massive, and there wasn't room to portray all the episodes found there. What is missing on the walls of St. Floret are mainly scenes having to do with Tristan's wanderings, his jousting, his eventual return to Cornwall, and his death, which are all found in MS fr. 1463, although subsequent versions of the *Compilation* do not necessarily have the same episodes as this manuscript. Perhaps the reason for this is that the Lord of St. Floret did not want to portray the tragic elements found in the *Tristan* on the walls of his château. Although "death" is portrayed on the walls of St. Floret, all those who die are ignoble foes of glorious past heroes. Furthermore, although the death of Branor was probably depicted on the east wall, this too was a "good death" after many valiant jousts, rescues, and a fully heroic life.

The Lord of St. Floret could have used the fresco cycle as a set of visual models to inform and inspire soldiers residing in the château who were responsible for its protection. This would be especially true because most of the local troop contingency probably could not read the rubrics written in northern French instead of the Occitan of the region. Moreover, since the *Compilation* frequently demonstrates the inefficiency of kings (mainly Arthur and Mark), perhaps there is a subtle political message here too. Furthermore, since the *Compilation* concentrates on the individual prowess of brave knights, and the kings in it are portrayed as weak, perhaps the Lord of St. Floret wanted to demonstrate the importance of relying on single knights or lords rather than a king.

This would be especially true because small fiefs such as St. Floret could not depend on the Crown for defense, but had to rely on local contingencies of troops during and after the Hundred Years' War.[509]

THE IMPORTANCE OF WORDS (RUBRICS) AND IMAGE (ART) AT ST. FLORET

The fresco cycle at St. Floret is a fusion of French and Italian styles, just as it fuses together image and text. However, many discrepancies in the stories of both Branor and Tristan are found when the rubrics do not exactly depict what is happening in a scene, or are so brief that the reader of the fresco must already know the details of the scene portrayed to fully understand them. The problem with discrepancies between text and rubric is further exacerbated by the fact that many of the images are of knights killing or jousting with other knights, which happens quite frequently in both the Tristan and Branor le Brun episodes found in the *Compilation*. When the rubrics contain lacunae, which occurs in the Tristan register, specific associations with episodes from Rustichello's text is quite difficult. Moreover, since no rubrics survive for the Branor le Brun register, we are entirely dependent on the image. These rubrics were already lost by the nineteenth century because even Dauvergne did not leave a transcription of them.[510] However, by following the episodes sequentially as they are relayed in MS fr. 1463, I

[509] Bell Henneman, *Royal Taxation*, 298.

[510] Even when Dauvergne discovered and subsequently worked on the fresco cycle of St. Floret in 1862, there were no surviving rubrics for the lower register of fresco--i.e. the Branor le Brun register. Since the château had been abandoned for many years and used for storage purposes, destruction of the lower register rubrics is understandable, since these were the closest to the ground.

hope to solve the problem of the order of the fresco scenes (with some margin of error when no rubric or image remains on certain sections of the walls of St. Floret).

Timothy Reuter, inspired by the work of Michael Toch, emphasizes the ritual use of force and the brutality of interferential language when establishing domination.[511] Perhaps this is why the family at St. Floret chose to write the rubrics of their fresco cycle in a language that was not indigenous to their region, but to the French ruling class. The people of St. Floret spoke northern Occitan or Auvergnat, so it is curious that the lord of the château would want the language of the rubrics of his fresco to be in northern French. Luyster surmises that due to the language of the *Meliadus* (northern French), and "the privileged status of the king's French in mid-fourteenth-century courtly culture" (again, northern French), there supposedly were valid reasons why the Lord of St. Floret chose to have his fresco rubrics in northern French. Rustichello and/or his earliest scribe wrote in Franco-Italian, which is a literary or hybrid language. But Franco-Italian is not exactly Oïl but certainly is not Occitan, which is much closer to Catalan than to Old French. Although I agree with Luyster that the Lord of St. Floret chose to have his rubrics in northern French, I believe that there are other reasons he chose to do this. I hypothesize that the Lord of St. Floret has his fresco in Old French because using the "King's French" in his rubrics would insure that those at the King's court who happened to visit the château would understand it. Hence, the anti-monarchical elements in the fresco cycle could subtly deride the Crown without openly opposing it. Lastly, I believe that the Lord

[511] Reuter, "Nobles," 89.

of St. Floret had his rubrics in Old French because this this was the language of his prized manuscript of the *Compilation*.

Luyster also notes that "the inscriptions show a telltale sign that their composer was not a native speaker of the king's French, because some of the nouns end in 'a,' which is typical of Occitan rather than northern French (e.g., *cornoalha, dama, ela, la tabala, la tabla, seta auanture, auantura, la teta).*"[512] Actually, the words ending in the vowel "a" are also very similar to Italian—*cornovoglia, dama, ella, la tavola, questa aventura, la testa*, which has not been documented in the literature on the fresco cycle. Errors in spelling could indicate that the artist at St. Floret was either Italian or Occitan, but most certainly he was not a native northern Frenchman. Luyster goes on to say that the patron or painter at Saint-Floret "wanted to create a specific reference to the tradition of prose romances, written in northern French, or a more general allusion to the traditions of the royal north."[513] However, she gives no evidence or precedent to support this idea.

Moreover, it is quite possible that the artist or artists who painted the fresco cycle were Italian(s) working in both the papal court at Avignon and the regions in close proximity to St. Floret like La Chaise-Dieu (40 miles from St. Floret), as Luyster has proposed. I would only further note that rubrics were meant to be read, and even though we do not know the literacy level of those who would have frequented the château in the mid- to late-fourteenth century, it could not have been very high, since St. Floret is such a rural area. To my knowledge, no scholar has offered a satisfactory explanation for the unusual rubrics that surround the stunning images at St. Floret. Nonetheless, due to the

[512] Luyster, "Courtly Art," 75.
[513] Ibid., 75.

immense size of the rubrics, the language used in them (northern French, not Occitan), the choice of text (Rustichello da Pisa's *Compilation*), and the probable participation of Italian artists, the importance of both words and image taken from different cultural milieus supports the idea that St. Floret was at a crossroads of different cultural influences.

So who exactly were the readers at St. Floret? Who could actually read and understand the large rubrics, with the exceptions of those in the upper or clerical classes? The Loomises gives what Luyster claims is an overly aristocratic interpretation and an "isolationist" view of the fresco cycle, because it was their belief that these works were for a strictly upper-class audience.[514] But even Luyster sees the Lord of St. Floret commissioning the fresco cycle in order to project an image of his own "noble self" and stature.[515] Marc Bloch in 1939 wrote that the thirteenth century saw a crucial period of change for the aristocracy; from being a nobility of fact, it became a nobility of right."[516] "Noble," especially with the establishment of monarchies in this period, was synonymous with royal, so I believe the Loomises were right in viewing the fresco as a statement of superior culture and power over those who viewed it, because although they could pretend, the lords of St. Floret could project only an image of nobility and aristocracy to its viewers. Furthermore, the larger-than-life and extremely violent scenes portrayed in the fresco could perhaps subtly convey to viewers the power that the Lord of St. Floret

---

[514] Luyster, "Courtly Art," 11, 28-29.
[515] Ibid., 34-35.
[516] Michael Aurell makes his argument with M. Bloch's ideas on thirteenth century aristocracy in "The Western Nobility in the Late Middle Ages: A Survey of the Historiography and Some Prospects for New Research," in*: Nobles and Nobility in Medieval Europe. Concepts, Origins, Transformations,* ed. Anne J. Duggan (Woodbridge, Suffolk: The Boydell Press, 2000), 264.

could wield over his subjects. Hence, although some may perceive the Loomises' ideas about the frescoes at St. Floret as "isolationist," I view them as pragmatic and indeed intended to impress and to give a sense of power over the local people of St. Floret, as well as over the few "foreign" visitors who happened to pass through this village.

St. Floret had at best sporadic contact with larger princely and papal courts. It was extremely isolated, and its lords probably made infrequent visits outside their fief. As a "self-contained culture," it probably absorbed whatever cultural products that came its way, such as Rustichello da Pisa's *Compilation*.[517] There was probably a trickle of travelers who came through the St. Floret region on their way to bigger and more important villages and towns. The choice of wall décor and architecture at St. Floret was most certainly calculated to demonstrate the wealth, power, and cultural level of its lords, because there seems to have been a state of permanent tension between low and high feudal nobility in the area.[518] Perhaps the fresco cycle was commissioned to mitigate these tensions by finding common interests of the group in the beloved stories of Arthurian lore as found in the *Compilation* of Rustichello da Pisa.[519]

The minor lords of St. Floret felt it necessary to demonstrate a high level of culture and courtly motifs in their tiny rural hamlet. Perhaps knowing that St. Floret was certainly not Paris or Avignon, the lords here had to mitigate the cultural divide between rural villagers and the occasional elite visitor by creating a fresco cycle that appealed to both common and courtly audiences. Hence, the images were for all, but especially for the illiterate or

---

[517] Vale, *Princely Court*, 297.
[518] Duggan, *Salonnières,* 28-30.
[519] Erich Köhler, "Observations historiques et sociologiques sur la poésie des troubadours," *CCM*, 1964, 28.

"common" visitor, and the large written rubrics were for the literate visiting merchants, minstrels, and aristocrats who could actually read them. Hence, there was, as it were, a *version commune* based on image, and a *version courtoise* based on the texts of the rubrics at St. Floret.[520]

CONCLUSION

The mobility and acceptance of Italian works of literature and art in the fourteenth century demonstrate how Rustichello's work was diffused and adopted by a much wider European audience composed of minor aristocrats, merchants, and noblemen. Art historian Erwin Panofsky has noted that literature, like art, was continuously assimilated, and that this assimilation could be methodical and selective.[521] At St. Floret, this assimilation was "methodical" in that the lord of St. Floret chose a specific romance text (the *Compilation*) and systematically followed it. In fact, the artists followed the story of the *Compilation* as found in MS fr. 1463 so religiously that it seems quite probable that Athon de St. Floret had a copy quite similar to this particular manuscript. The assimilation was "selective" in that the patron of the fresco cycle chose to delete episodes that were not relevant to his specific political situation, which was dependent on the prowess of strong individual knights rather than the far-off Crown in Paris. It was furthermore selective in the choice of language used in the rubrics. The rubrics should

[520] See Joan Tasker Grimbert, "Introduction," in *Tristan and Isolde: A Casebook*, ed. J.T. Grimbert (New York and London: Garland Publishing, Inc., 1995), xxvii, specifically in reference to the different versions of *Tristan* in prose and verse.

[521] Erwin Panofsky, *Renaissance and Renascences in Western Art* (Copenhagen: Russak, 1960), 156-61.

have been in Occitan so that a majority of the local lords and literate folk of the region could understand them, but the Lord of St. Floret instead had them copied in northern French. Despite all this, the story of Branor le Brun or the "Old Knight" must have been particularly important to the Lord of St. Floret because he depicted his entire story on the walls of his château, and these scenes are the first visible images when the reader enters the aula.

The fusion of a Franco-Italian style in the fresco cycle, much like the Franco-Italian used in Rustichello's text, was accepted and even adopted in France, although later versions of *Compilation* were made more "French," and the Italian-ness of the language was obliterated. Many pictorial elements in the fresco have been labeled "Italianate," but both the fresco cycle and the *Compilation* cannot be identified as works that are specifically "Italian" or "French." More specifically, it seems that the fusion of cultures was an integral part of a broader global culture that seems to have thrived in the late-thirteenth to mid-fourteenth centuries, and the location of the fresco cycle at St. Floret demonstrates that Rustichello's work was widely diffused outside of Italy. [Figure 27].

Figure 27: Exit St. Floret. Florea, 2015.

Table 1: Rubrics and image description with scenes as indicated from the *Compilation*. Branor register.*

*Italics indicate the image/rubric are missing

Location START BRANOR LE BRUN i.e. LOWER REGISTER	**Brief description painting**	**Characters**	**Rubric**	**Translation rubric**	**Location in the *Compilation*/Episode summary**
East wall, right-hand side, lower register	*No image remains. Probably a court scene with Branor's arrival in Camelot.*	*Branor, his lady, King Arthur, knights of Camelot.*	*No rubric remains.*	*N/A*	***Episodes 1-3*** ***Ep. 1-2:*** *Intro to the Compilation.* ***Ep. 3:*** *Names of knights present at the court of Camelot on the day of Pentecost and arrival of the Old Knight, i.e., Branor le Brun who is accompanied by a beautiful lady.*
South wall, left lower register	*No image remains. Branor jousts a group of knights.*	*Branor, Palamedes, Gawain, and other Round Table Knights.*	*No rubric remains.*	*N/A*	***Episodes 4-6*** ***Ep. 4:*** *Announcement of Branor's arrival by a servant. Branorchallenges all the knight of the Round Table to joust. The prize is the beautiful lady that accompanies Branor.* ***Ep. 5:*** *Branor jousts and bestsPalamedes* ***Ep. 6:*** *Branor jousts and bests Gawain, Lamorat, Gariet, Beord, Yvain, Sagremor, Bleoberis, Sigurades, Separ, Estor, and Givret*
South wall, central scene, lower register	*No image remains Branor jousting Tristan.*	*Branor and Tristan.*	*No rubric remains.*	*N/A*	***Episodes 7-8:*** *Branor jousts and bests Tristan.*
South wall, right-hand side, lower register	*No image remains. Branor jousting Lancelot.*	*Branor and Lancelot.*	*No rubric remains.*	*N/A*	***Episodes 9-10:*** *Branor jousts and best Lancelot.*
West wall, left lower register	*No image remains. Branor jousting King Arthur.*	*Branor and King Arthur, possibly ladiesof the court.*	*No rubric remains.*	*N/A*	***Episodes 11-14:*** *Branor jousts and bests King Arthur.*
West wall, lower register, central scene	*No image remains. Branor speaking to King Arthur and the court at Camelot.*	*Branor, King Arthur, and court of Camelot.*	*No rubric remains.*	*N/A*	***Episodes 15:*** *Branor speaks to King Arthur and Arthur's court. But Branor refuses to give his age orhis name. Branor decides to leave Camelot and promises that King Arthur and the court at Camelot will know his name.*

Table 1: (con't)

West wall, right-hand side, lower register	*No image remains. Combat scene with Branor fighting Count Ghiot and the men of the Count agains Branor and the men of Listinois.*	*Branor, Lady of Listinois, her mother, Count Ghiot, and other knights.*	*No rubric remains.*	*N/A*	***Episodes 17-26:*** *How Branor goes with a lady of Listinois to free her lands and her mother from the evil count Ghiot*
North wall, under left oculus	Branor fighting the evil knight Sadoc.	Branor le Brun, Sadoc, and the knights of Sadoc.	*No rubric remains.*	*N/A*	**Episodes 27-29:** How Branor fights Sadoc and his twenty knights.
North wall, central scene, lower register	Branor fighting the evil knight Karacados who has kidnapped a maiden. The maiden is sitting on horseback behind the fighting knights (Branor and Karacados).	Branor le Brun, Karacados, and a maiden.	*No rubric remains.*	*N/A*	**Episodes 30-34:** How Branor saves a maiden kidnapped by Karacados. *In the *Compilation* Branor does not kill Karacados as portrayed here.
North wall, under right oculus	Branor rescuing a knight and his wife from a group of evil knights.	Branor, imprisoned knight, group of knights fighting Branor.	*No rubric remains.*	*N/A*	**Episodes 35-37:** How Branor saves a captive knight and his wife.
East wall, left-hand side, lower register	Castle wall with towers. Balcony with three blonde ladies. One of these is crowned and probably Guinevere. Directly below them, the faded face of a man. Farther to the right of the ladies – another bearded/crowned man (Arthur?).	Probably Guinevere, two other ladies, and King Arthur.	"sire roi, le chevalier qui abati tant de votres le jour de la pantecoste. . ."	"sir King, the knight who beat so many of yours (i.e. knights) the day of Pentecost. . . " (my trans).	**Episode 38:** How Branor sends a messenger to the court at Camelot revealing his name and situation.
END ADVENTURES OF BRANOR LE BRUN East wall central scene, lower register	*No image remains.* *King Arthur sending for a scribe to record the adventures of Branor le Brun? Funeral procession for Branor?*	*Court of Camelot scene? Tomb of Branor le Brun?*	*No rubric remains.*	*N/A*	***Episode 39:*** *How King Arthur sends for a scribe to record the adventures of Branor le Brun / his funeral?*

Table 2: Rubrics and image description with scenes as indicated from the *Compilation*. Tristan register.

Location START ADVENTURES OF TRISTAN I.E. UPPER REGISTER	**Brief description painting**	**Character (s)**	**Rubric**	**Translation rubric**	**Location in the *Compilation*/Episode summary**
South wall, central scene	Head of a bearded and crowned man in a tree.	King Mark.	*No rubric remains.*	*N/A*	**From Béroul. Orchard scene :** *King Mark hides in a tree to discover the lovers.*
South wall central scene, left jamb	Blurry male figure. Probably Tristan behind walls at Tintagel.	Tristan and castle of Tintagel.	"uesi come M[onseignor] T[ristan] chiuachoyt pour le reaume de Logres ? qtant auanture e uint vs la nuit"	"this is how Sir Tristan rode through the realm of Logres so as to (seek) adventure and it was becoming night" (my translation).	**From Béroul. Orchard scene or Rustichello da Pisa's Episode 40:** This is probably the scene where Tristan leaves Cornwall and alos his love, Iseult, in order to seek adventure in Logres.
South wall central scene, right jamb	Figure of Iseult pointing upwards to indicate that Mark is present.	Iseult and castle of Tintagel.	"reina; lors] dit ela T(ristan) que poyson uoy ie ie? ie ne ui molt lonc tans a. dama ie le bien coneu quar ie lay autrefois ueu. . . "	"[queen; then] said she: Tristan said to him what fish do I see? I have not seen such for a very long time. Lady, I knew it well for I have seen it other times. . . " (my translation).	**From Béroul. Orchard scene:** Iseult indicates to Tristan that Mark is listening to them in a tree. (She sees his reflection in a pool).
South wall, right oculus, right and left jambs	Very damaged figures of Tristan and Palamedes sleeping under a tree?	Tristan and Palamedes.	Loomis gives the following rubric : "uesi se cocha en la forest entre [beaus] a[rbes e dor]mi sur sun ecut e aui*n*t a*n*si com aua*n*ture . . . enemi mortel se cocha e se co[m]ple[int] . . . e pourquoy se cocha si . . . si fort qua*n*t . . . "	"here he laid down in the forest between lovely trees and he slept on his shield and it happened by chance . . . mortal enemy lay down and lamented . . . why he lay down so . . . so mighty when . . ."	**Episode 41:** In this episode, Tristan rides until nightfall and decides to stop and rest. He falls asleep on his shield. Soon Palamedes comes to the same spot and unbeknownst to him, decides to rest right next to the sleeping Tristan. Palamedes laments his love of Iseult and voices his hatred toward Tristan.

Table 2: (con't)

*Skipped E**pisodes 42-43** Brandelis arrives at Merlin's Stone and wants to stop the joust*.					
West wall, left-hand side, upper register	*No image remains.*	*Tristan and Lancelot.*	*No rubric remains.*	*N/A*	***Epsodes 44-48** Battle at Merlin's Stone - Tristan fights his friend Lancelot thinking he is Palamedes.*
West wall, central scene, upper register	*No image remains.*	*Tristan and various knights.*	*No rubric remains.*	*N/A*	***Ep. 49-50:** Tristan defending a bridge from 10 knights.*
West wall, right side, upper register	*No image remains.*	*Tristan's introduction to the court at Camelot.*	*No rubric remains.*	*N/A*	***Ep. 51:** Tristan's introduction to the court at Camelot.*
North wall, left oculus, left jamb	Back haunches of horse is all that remains.	Tristan.	"tristan de liono]is deliura dina[dan]. . .[e]stoyrent a la fey . . .i auantura que . . . "	"Tristan de Leonois delivered Dinadan . . . belonged to the Fey . . . an adventure which . . ." Loomis emending Dauvergne	**Episodes 52-53** **Ep. 52:** Tristan leaves Camelot to seek adventure; **Ep. 53:** Tristan fights fights 36 knights of Morgan le Fey to save Dinadan and Dodinel.
North wall, left oculus, right jamb	Figure of a horse and knight.	Tristan.	". . . [con]pagnon de la tabala . . . [ica eleh (?) . . . [nin(?)] an la Perilluse [for]est uii iors apres quil fu pa(r)tis de Camelot."	" . . . companions of the table. . . (?) In the Perilous Forest seven days after he had departed from Camelot."	**Ep. 53:** In the *Compilation*, there is a specific reference that states "on the 7th day after Tristan left Camelot finds himself in the Perilous Forest."

Table 2: (con't)

North wall, upper central register	Tristan on left with bound hands. In front of him is Palamedes on a brown horse with a raised sword. Palamedes is fighting a group of knights. In front of them, the bodies of fallen knights, discarded arms, and the severed head of one of the knights.	Tristan, Palamedes, and other unidentifiable knights.	"uesi come m[onseignor]pal[emedes] deliura m[onseignor] t[ristan] de lionoys que un uauasor tenoyt pris et li uoloyt fere coper la teta pourse que il li tua sun fis an la perilhue forest qui estoyt un de xxvi cheualiers a la fey morgain; e por se fit pes m[onseignor] t[ristan] a m[onseignor] pal[emedes]; si estoyt il le gregnor enemis mortel du munde."	"here is how Sir Palamedes delivered Sir Tristan of Leonois whom a valvassor held prisoner and wanted to cut off [his] head because he had killed his son in the Perilous Forest who was one of the 26* knights of Morgan le Fay and because of this Sir Tristan made peace with Sir Palamedes (who) was his greatest mortal enemy in the world."	**Episodes 57-60** **Ep. 57:** Tristan leaves the abbey and goes to the castle of a valvassor. Unfortunately, the Valvassor's son was killed by Tristan as he was a knight of Morgan le Fey. **Ep. 58:** The valvassor and Tristan dine together. The valvassor informs Tristan that his son has recently been killed by a knight named "Tristan." However, the valvassor doesn't recognize that Tristan is dining with him. A lady of this court informs the valvassor that his guest is the same Tristan that killed his son. Tristan doesn't want to stay at the castle but decides to rest in the room given to him. When he has gone to bed, 12 knights attack and imprison Tristan. **Ep. 59:** The valvassor decides to decapitate Tristan. Tristan laments. Palamedes shows up and decides it would be ignoble of him not to save Tristan. Palamedes saves Tristan. and they leave together. **Ep. 60:** Tristan realizes it was Palamedes who saved him and they become friends instead of mortal enemies.
Skipped episodes 61-62:Story of a knight named "Dalides." This character was also an original character creation of Rustichello da Pisa.					
North wall, right oculus, left jamb	Solitary figure of Galehaut on horseback	Galehaut	"apres la deliueranse de m[onseignor] t[ristan] chiuauchoyent m[onseignor] pal[amedes] e m[onseignor] t[ristan] ensenble e encontrerent m[onseignor] galaaz e le firent ioster ansi come [(paur)]?"	"after the deliverance of Sir Tristan, Sir Palamedes and Sir Tristan rode together and they encountered Sir Galehaut and they forced him to joust as if [fear]?" (my trans).	**Ep. 63:** Galehaut is forced to joust Palamedes and Palamedes is defeated.

Table 2: (con't)

North wall, right oculus, right jamb	Tristan on a white horse with a silver surcoat. Palamedes stands behind Tristan on foot.	Galehaut, Tristan, Palamedes, and Banis.	" . . . les abatit il tous deus tant mis m[*onseignor]* t[*ristan]* a trousa si (?) e li autre dit sun non apres quil ot dit [s]e conoytren*t* e se aiere*n*t [au mostier] a les troua m*[onseignor]* banis e lor dit les noules que uos aues . . . "	"he then defeated Sir Tristan (. . . ??) and the other told his name after he had told . . . knew each other and departed [to the monastery] and Sir Banis found them and told them the news that you have. . . "	**Episodes 64-68** **Ep. 64:** Tristan jousts Galehaut. **Ep. 65:** Galehaut fights both Tristan and Palamedes **Ep. 66** Tristan and Palamedes find out that they are fighting Galehaut who is the son of Lancelot. **Ep 67:** Tristan and Palamedes reveal their names to Galehaut. All three knights go to recover at a monastery. **Ep. 68:** Banis arrives at the monastery and tells them that Lamorat of Galles and Bleoberis of Gaunes have been captured by Helis the Red**.**
East wall, upper left register	*No distinct image remains*	Tristan, Banis, Galehaut, Helis the Red, Lamorat, Bleoberis, and Palamedes	"uesi come m[onseignor] banis emmena m[onseignor] galass [lors]?que helis li roy tenoy en sa prison [pal?] . . . de la tabla round a seli point fu desconfis elis. . .estoy m. . . "	"see how Sir Banis led? away Sir Galaas . . .[when(?)] Helis the King held in prison Palamedes . . . of the Table Round. at the time Elis was discomfited . . .was Sir. . . "	**Episodes 69-71** **Ep. 69:** Banis, Galehaut, Palamedes, and Tristan go to fight Helis the Red who imprisons all the knights of the Round Table that he finds. **Ep. 70:** Banis, Galehaut, Tristan, and Palamedes are beating Helis' knight which makes him mad with rage. Helis manages to fell Tristan in a dishonest way which enrages Galehaut and Palamedes. Palamedes strikes Helis almost killing him. **Ep. 71:** Tristan makes Helis swear he will never imprison Round Table knights again and to free Bleoberis and Lamorat. He does and they all go to the same monastery that they left from. From there, they separate and their different journeys. Tristan and Palamedes to the Joyous Garde and the rest to Camelot.
East wall, central portion has no surviving image or rubric. Following MS fr. 1463, here there was probably the story of how Erec saved his wife Enide from Lamorat, Bleoberis, and Banis (Episodes 72-75), OR Episodes 76-78: Battle at Arpinel Castle with Givret, Yvain, and Brunor le Noir.					

Table 2: (con't)

East wall, right window seat, near corner of the right window	*No image remains*	Brunor le Noir, Givret and Yvain OR Tristan, Palamedes, and Mores	"[arri (?)]ue deuant la tor . . . iostasent au chevalier de . . . acheua seta auanture et li o[trea?]"	"or arrives (?) before the tower . . . should joust with the knight of . . . achieved this adventure and [granted (?) him."	**Episodes 79-80 and 98-102** **Ep. 79-80:** After fighting the knights at Arpinel, Brunor, Givret, and Yvain arrive at the tower of the Pin Reont. Brunor does not wish to fight, but Givret and Yvain do. They both lose and must surrender give their names and their shields to the knight that beat them. They reunite with Brunor (who was watching the joust), and they all continue their journey together. AND **Ep. 98-102:** Tristan and Palamedes arrive at the Pin Reont. Tristan asks to fight first, he does, but loses his joust. An enraged Palamedes kills the knight at the Pin Reont. Palamedes is now too weak to travel so Tristan leaves Palamedes with a lady until he is well.
Skipped: Episode 81-82: Tristan and Palamedesdefeat the knights of Arpinel. Episodes 83-91: Tristan and Palamedes stay at the tower of a valvassor. Tristan teases Palamedes. They won't leave their names which angers the valvassor. Episodes 92-95: Adventures of Tristan and Palamedes against the Lord of the Rock. Episode 96 How Tristan and Lancelot reunite. Episode 97: Story of Givret. Episodes 103-105: Tristan asks Brunor to fight a group of 10 knights on a bridge. Brunor concedes because he says he istoo tired from the previous joust.					
South wall, left oculus, left jamb	On the left is Brunor also known as the Knight with the Vermilion Shield (KVS) or also the Knight	Brunor le Noir and Tristan	"uesi come M(onseignor) T(ristan) sacompagna au chevalier a lescu uermil e est u[enu] en pais que estoyt garde de plus de cent chevaliers; M(onseignor) T(ristan) leu[r] pria qui il le lesasent esprouer a seta auanture"	"this is how Sir Tristan accompanied the knight with the vermillion shield and (how) he came to a land which was guarded by more than one hundred knights;Sir Tristan begged them to let him leave? Essay? this adventure" (my trans.)	**Episodes 106-110:** Tristan asks to fight a group of 60 knights, and Brunor allows this. Givret and Yvaain help Tristan fight.* *In MS fr. 1463 Tristan goes against 60 not 100 knights as stated in the fresco cycle rubric.
END ADVENTURES OF TRISTAN South wall, left oculus, right jamb	To the right of the oculus is a group of soldiers that Brunor is fighting.	Brunor le Noir and Tristan	"[le] chevalier a lescu vermeil li otreae il le desconfis a layde de ses conpagnon".	"the knight with the vermillion shield granted it to him and he discomfited them with the help of his companions" (my trans.)	

Conclusion

Wanting to capitalize on HBO's phenomenal success with the medievalesque fantasy series *Game of Thrones,* Warner Bros. Entertainment released the film *King Arthur Legends of the Sword* in May 2017. This film was not well-received and flopped at the box office. Like most Hollywood movies about King Arthur, this one also has little to do with traditional Arthurian romance and more to do with fast action sequences, CGI effects, and violent fight scenes. I saw the movie and was not impressed. However, one of the trailer taglines stayed with me. In this trailer, a character named Jack's Eye asks the soon-to-be King Arthur to: "Tell me a story, tell me every detail." [1] This may seem a simple phrase, but in its simplicity, it encompasses the main reason why King Arthur films can still be made today: we all love being told a good story. Furthermore, this line demonstrates that modern movie goers are not so different from medieval audiences who listened to or had read Arthurian romances. We all want to be told stories because they delight, they educate, they help us communicate more efficiently, and they connect us to a distant past. More importantly, the hero of these stories reassures us that the virtues of moral integrity, loyalty, honor, and justice can and will prevail. In precarious times, whether they are now or in medieval Europe, stories give us hope for a better tomorrow and help us escape, however briefly, the world we live in. Lastly, we all want to believe in a hero like King Arthur, and we all want to be told memorable stories like Rustichello da Pisa's tale of Branor le Brun.

---

[1] *King Arthur Legends of the Sword*. Dir. Guy Ritchie, 2017. Theatrical trailer. Youtube.com. Accessed on July 25, 2017, <https://www.youtube.com/watch?v=4luDtkC3Oy0>.

The Branor story is not a typical medieval knight tale. Because of its novelty, the Branor stories --and stories like it-- continue to be reproduced in various mediums even today. This story is not a typical "hero" story because in it Branor repeatedly defeats New Table/Round Table Knights in jousts even though these knights are known as the best and bravest of their day. What also sets Branor apart from the Round Table Knights is his large stature, his strength, and, most of all, his great age. He is the last knight still alive from the Old Table of Uther Pendragon, and compared to the Round Table Knights, he is gigantic in stature. Branor is 120 years old and decides to take up arms after forty years to prove himself against the new generation of knights. By his age, he should be a feeble old man and close to death. He should not be able to even lift a lance or sword, let alone wield one. Likewise, he should not be able to win his jousts over knights who are at least ninety years younger than he, yet he does.

If previous mythology were heeded, the younger hero would supersede the older one and *not* vice versa. To cite some precedents: David slays the giant Goliath, Ulysses defeats the giant cyclops Polyphemus, and Guy of Warwick kills the giant Colbrond in the thirteenth-century version of the legend.[2] However, in Rustichello's original episodes of Branor le Brun, the giant adversary triumphs over the smaller, younger, and weaker generation of heroes. Here Rustichello intentionally reverses the famous twelfth-century metaphor of Bernard of Chartres about "dwarfs standing on the shoulders of giants." Obviously, the Round Table Knights are the dwarfs, and Branor is the giant when applied to Rustichello's Branor episodes found in the *Compilation*. Since Branor always defeats

[2] See Velma Bourgeois Richmond, *The Legend of Guy of Warwick* (New York and London: Garland Publishing, Inc., 1996), 407.

the New Table Knights, it seems that they will never be at his level, and cannot deign to sit on his shoulders. The Round Table Knights will never be able to see more than or beyond Branor's line of sight because they are physically so much smaller and weaker than him. Instead, they must abase themselves at his feet when he soundly defeats all of them in jousts. Since the Round Table Knights are at his feet and are looking up at him, it is as if he is an object of veneration, much like a priest holding up the Eucharist for his parishioners to adore. Hence, Branor, and what he stands for--the past traditions and values--must be an object of veneration and emulation. The New Table Knights must also realize that they will never be better than the previous generation of knights and still must strive to reach Branor's physical and figurative "height." However, Rustichello's Branor story was not only memorable and educational but also contained a veiled political allegory against Rustichello da Pisa's oppressors.

In the Branor le Brun episodes, Rustichello calls for the overthrow of the current Guelph political regime in Pisa. The Pisan Guelphs were led by Ugolino della Gherardesca and Nino Visconti, who were impeding the return of Ghibelline prisoners held in Genoa after the Battle of Meloria (1284). Rustichello was among these Pisan prisoners. He was held in Genoa for over fourteen years due to the political regime of Ugolino and Nino. In these episodes, Rustichello was calling for a new leader-knight who would uphold the past traditions and values while leading Pisa back to its former Ghibelline glory. If Rustichello could not find a Pisan leader who embodied the traditional values of old, he would settle for the sound defeat of the current Guelph regime. In the veiled political allegory found in the Branor episodes, Ugolino and Nino's

new Guelph government was represented by the Round Table Knights, and the traditional, Ghibelline government was represented by Branor. On the one hand, if a Round Table Knight can defeat Branor, then this New Table Knight would, metaphysically speaking, absorb Branor's strength and power, but on the other hand, all are proven less formidable than the last Old Table Knight, Branor le Brun.

In *Of Giants, Sex, and Monsters in the Middle Ages*, Jeffrey Cohen argues that a hero "organizes his selfhood according to a spectacular manqué (want, lack)."[3] But what does Branor le Brun "lack" in his episodes? The obvious answer is that he lacks his youth, but despite this, he is invincible. However, Branor also lacks the self-confidence he once had and therefore desires to overcome his insecurities at all costs. On the other hand, the Round Table Knights want to prove themselves against the previous generation of knights by defeating the last remaining quasi-giant from the legendary Old Table. Branor's feelings of inadequacy fade when his real or imagined "manqué" proves to be baseless. Rustichello da Pisa's "manqué" is his lack of freedom. He cannot physically fight his captors, but he can write. By using words as weapons, Rustichello can press for a strong knight with the traditional or republican values of old to defeat the "new" leaders of Pisa and show his Guelph enemies what they are lacking. Nonetheless, whoever decides to take up the Ghibelline cause must also understand that this will be a lonely endeavor as he will be alienated from most of the other Italian communes. The solitude of

[3] Jeffrey J. Cohen, *Of Giants: Sex, Monsters, and the Middle Ages* (Minneapolis: University of Minnesota Press, 1999), 93.

Branor as the last knight of the Old Table could also reflect Rustichello's own feelings of loneliness as he languished in a Genoese prison.

A sense of solitude can also be found in the historical personae King Edward I of England, and the minor French lord Athon de St. Floret, both of whom were treated at length in this dissertation because of their connection(s) to Rustichello da Pisa and his *Compilation*. Edward, who initially inspired the character of Branor, probably felt very much alone when he returned home from the crusade. His father had recently died, he was suddenly king, and his England was far from being a united kingdom. Perhaps not having a strong paternal figure, and after seeing the crowd-pleasing power of Arthurian myth in Italy with Rustichello's work, Edward shrewdly decided that he too would exploit Arthurian lore when he returned home. Arthur was one of the first kings of Britain and Edward, a later king, could adopt Arthur as his forefather and claim his own ancestry from this legendary ruler. If Edward's forefather was one of England's founding fathers, Edward could legitimize his reign, and also help unite the kingdom since many of Edward's subjects revered Arthur even if they did not particularly like Edward. Likewise, the minor lord Athon de St. Floret, from the Auvergne region in France, used Arthurian myth to bolster his own rule over the fief of St. Floret, and he seems to have felt great affinity toward the solitary figure of Branor. In fact, Athon adored the Branor character so much that he had all of Branor's episodes from the *Compilation* painted on the walls of his château. Athon, living in the mid-fourteenth century, had to deal with bouts of plague, the Hundred Years' War, and marauding bands of mercenary soldiers. Furthermore, because Athon lived in such a rural setting, he knew that he could not

depend on the Crown in Paris or the Pope in Avignon. Hence, he adopted the invincible but solitary character of Branor to represent the power that a single man can have despite insurmountable odds. Athon, as protector of the small village of St. Floret, could harness the imaginary strength of the Branor character to inspire his people and assure them of his own fortitude. Athon could imply that he was the living doppelgänger of the great knight Branor projected prominently on his walls.

Being alone and isolated was a feeling that also defined Pisa and its majority Ghibelline populace. A Pisan judge prophetically tells the Pisan Ghibellines in 1274, "You are alone in Tuscany, you have no one to help you if not for God and his goodness" (*Siete soli in Toschana, non avete nessuno che vi aiuti se non Idio e la sua bontà*).[4] The Republic of Pisa survived for hundreds of years as a sovereign commune relying only on its pride and independence. As F. Jameson, J. Macek, B. Fuchs, and many others have pointed out, romances reflected the ideological conflict of the court, and in this case, the Italian commune.[5] Although it is hard to definitively say how popular literature fared in periods of crisis, it is apparent that Rustichello da Pisa and his writing were shaped by the current and precarious political situation in Pisa. However, despite the fact that external and internal powers often tried to impede the communal welfare of Pisa, the commune was not the dwarf standing on the shoulders of giants, but the city of Pisa was, at least in its and Rustichello's own estimations, the giant itself.

---

[4] This quote was written by a chronicler in 1274 some ten years before the disastrous Battle of Meloria (1284). See Emilio Cristiani, "Gli avvenimenti pisani del periodo ugoliniano in una cronaca inedita," *Bollettino Storico Pisano* XXVI-XXVII (1957-1958): 80; and also M. Tangheroni, "La situazione," 89.

[5] See F. Jameson, "Magical Narratives," 155-56, J. Macek, "Gli intellettuali," 414, and B. Fuchs, *Romance,* 40.

***

The *Compilation* could have gone on forever, and in a sense, through its legacy, it does. Even in the popular series *Game of Thrones*, there is a character named Barristan Selmy who much resembles Branor le Brun. Barristan is an old knight, who fought for the previous king and supported the former government. Despite his great age, he is still formidable in battle and on the jousting field. This modern adaptation of an old and venerable knight is the vestige of the Branor character found in the *Compilation*, whose episodes could have continued indefinitely. In Episode 36, after saving a captured knight and his wife, Branor asks the couple if they need any more help: "and the Old Knight asked them if someone else still threatened them" (*et li Viel Chevalier lour dit se il ont plus garde de nelui*).[6] The couple says "yes" they do or "*Oïl voiremant*," and Branor says he "will do everything in his power to help them" (*car je ne vos faudrai d'aide a mon pooir*).[7] Branor then proceeds to hear their story and spend the night in their château before leaving the next morning. This sort of dismissive behavior is completely out of character for Branor, who always makes sure that the people he saves are safe before he continues on his homeward journey. However, in these episodes, Rustichello has Branor hastily returns to his home in Northumberland, writes a letter to King Arthur revealing his name and station, and then dies within the year. This is perhaps an indication that Branor's creator, Rustichello da Pisa, had other pressing writing engagements to undertake--such as his collaboration with Marco Polo on the *Milione*--and so had to finish his *Compilation* quickly.

---

[6] *Il Romanzo*, 36:11.
[7] Ibid., 36:12.

Despite its detractors, Rustichello's *Compilation* is a notable and thought-provoking work.[8] The idea that an Italian notary could write for an English king in a French-like language negates any preconceived notions of static cultures and languages in the late thirteenth century. Rustichello's work challenges fixed assumptions of cultural identity by ushering in new ideas of cultural mobility and influence throughout Europe. Furthermore, feelings of "manqué," Branor's solitary nature, and representations of old vs. new political systems were all easily and often transposed and transformed to fit other political contexts. Similarly, Arthurian legend permeated and still permeates contemporary culture. It resurfaces in a variety of surprising venues and disparate registers, and Rustichello's contribution to this tradition is no exception. For this reason, Rustichello's *Compilation* could spawn a wealth of possible literary studies, and not just on Branor le Brun. For my part, I hope to have proven in this dissertation that Rustichello was an innovative and influential author whose contribution to medieval Arthuriana earns him a place in the canon of Italian Literature, and at least a mention in anthologies of medieval world literature.

[8] One such detraction was made by Claudio Lagomarsini when states that "we must focus on the fact that the *Compilation* is a (second rate) romance, made up of (first rate) romances" (*Ripartiamo da una messa a fuoco: la Compilation è un romanzo (di secondo grado) fatto di romanzi (di primo grado)*. See C. Lagomarsini,"Rustichello da Pisa ed il *Tristan en prose*: Un esercizio di stemmatica Arturiana," *Studi mediolatini e volgari* 58 (2012): 60.

Appendix 1: Translation of the Branor le Brun episodes 1-39 of the *Compilation* of Rustichello da Pisa

(1) Lords, emperors and kings, and princes and dukes, and counts and barons, knights, vavasours and townspeople, and all noblemen of this world who want to delight in romances, take this [one],[1] and have it read from beginning to end; here you will find all the great adventures that happened to the wandering knights from the time of King Uther Pendragon until that of King Arthur, his son, and the peers of the Round Table.

And know in truth[2] that this romance was translated from the book of my lord Edward, King of England, at the time that he was going over the sea in the service of Our Lord God to conquer the Holy Sepulcher. And Master Rustichello da Pisa, who is pictured here above, compiled this romance, for he translated all the wondrous stories and the most extraordinary adventures that he found in that book; and he will speak very succinctly of all the great adventures of the world. But know that he will talk more about my lord Lancelot du Lac and my lord Tristan, son of King Meliadus of Leonois, than about any others, because these were without a doubt, in their time, the best knights on earth. And the Master will relate more episodes and battles that happened between these two than you will find written in all the other books, because he found them written in the book of the King of England.

---

[1] All bracketed passages have been inserted for legibility. In this case, Rustichello writes “ci prenés ceste” or “take this” so I have inserted “one” to indicate a “romance.” (*Il Romanzo*, 1:1).

[2] "Et sachiez tot voirement, mes si sachies, or sachiez, sachiez de voir, car sachiez, sachiez” or "know in truth, but know, know truly, know, ecc. . . are frequent apostrophes used by Rustichello and all medieval romance writers. There are over 40 just in the Branor le Brun episodes.

But at the beginning of this book the master wants to put an extraordinary adventure that happened in Camelot, at the court of King Arthur, Lord of Logres and of Britain.

Here begins the great chivalric feats of the Old Knight and how he came to the court of King Arthur.

(2) In this part of the tale it says, just as the true story affirms, that Lord King Arthur was in Camelot in the company of many kings and lords. And know in truth that there were present on that occasion many noblemen, and also most of the companions of the Round Table, of whom I will name a few.

(3) Know then that there was King Karados[3] and the King of Ireland,[4] whose name was Yon,[5] and the King of the Straight Marches,[6] the Kings of Norgales,[7] and of Northumberland,[8] the King beyond the Marches of Gallone[9] and the King of France,[10] and so many other kings that there were fourteen in all. Also there was my lord Lancelot

---

[3] G.D. West, "Karados, var. Caradoc, -dos, Karacados, Karakados," in *An Index of Proper Names in French Arthurian Verse Romances, 1150-1300* (Toronto: University of Toronto Press, 1969), 179-80.

[4] West, *Index*, "Irlande," 167-168 for all those rulers who are connected to the kingdom of Ireland in verse and prose romance.

[5] Ibid., "Yon," 307.

[6] Ibid., "Estroite Marc(h)e, (de) l', var. Estroicte Marche" 110. A kingdom ascribed to various noblemen. It is translated as "Straight Marches" by William Caxton in his translation of Morte Darthur by Sir Thomas Malory as have I. See CHAP. LXXI in Thomas Malory's, *Le Morte Darthur,* Comp. Edward Strachey, Trans. William Caxton (London: Macmillan, 1925), 307.

[7] West, "Norgales," 235. Although this name appears frequently in the Arthurian tradition, its exact geographic location is unknown. Likewise, the kingdom is ascribed to a plethora of different characters in Arthurian romance.

[8] Ibid., "Norhombel(l)ande," 236.

[9] Ibid., "Marches de Gallone," 209.

[10] Ibid., "France," 120.

du Lac[11] and my lord Tristan of Leonois,[12] my lord Gawain, nephew of King Arthur,[13] and Lord Palamedes the Saracen the mighty knight,[14] and Lord Lamourat of Gales.[15] And still many other worthies were there, all reunited there in great pomp—as was proper, because know that it was the day of Pentecost.

And when[16] the kings, lords, and knights had eaten, the tables removed and the company washed, suddenly there appeared in front of the palace a knight armed from head to toe.[17] He was so tall and had such an imposing frame know then that he was almost a giant. The knight accompanied a lady very exquisitely dressed, and I will tell you how: know in truth that this lady was dressed in rich fabric embroidered in gold, and on her head she had a crown of gold and precious stones. She was riding a splendid palfrey covered in precious crimson samite that hung down to its hooves, and she did not seem like a mortal woman, but a spiritual creature. The knight had besides his lady, three squires: one carried his shield, another his helmet, and the third his lance.[18]

---

[11] West, *Index,* "Lancelot," 187-88.
[12] Ibid., "Tristan," 295-96.
[13] Ibid., "Gawain," 134-35.
[14] Ibid., "Palamedes," 242-43.
[15] Ibid., "Lamorat, var. Lamourat" 186.
[16] "And when" or "Et quant" is Rustichello's favorite transition and he uses it over 115 times just in the Branor le Brun episodes of the *Compilation.* Although this may seem tedious to the modern reader, I have translated all of them as I believe that they lend a certain urgency to the text.
[17] Literally Rustichello writes, "un chevalier armés de totes armes" or "a knight armed of all arms." Hence I chose the idiomatic expression "armed from head to toe" to render this idea better in English, (*Il Romanzo,* 3:4).
[18] Rustichello uses the word "glaive" or "glaiviez" which means "lance" or "javelin" in French. But it could also mean "massacre: or "dying a very painful death." Rustichello's knights are jousting (*joster*) which is done with a lance, and not going into battle (*bataille*), which is done with a sword, This is also evidenced by the fact that later, in Episode 5, Branor states that he will take up the "lanse" and remain quintain for Palamedes during their joust (*Il Romanzo,* 5:3). Likewise, Branor remains "quintain" for almost all his jousts and only takes up the sword on the rare occasions. See Algirdas Julien Greimas, "Glaive, glage," *Dictionnaire de l'ancien Français* (Paris: Larousse, 2001), 292.

Here is narrated how Lord Palamedes and many other knights were defeated by the Old Knight.

(4) And when the knight had arrived before the palace as you have heard, he did not delay long in sending one of his servants to King Arthur, with words that you are about to hear.

The youth who had been given that task by his lord[19] went straight into the great hall, where King Arthur was surrounded by all his companions, as you have heard. The youth went straight up to the King, whom he recognized, and said: "My lord King Arthur, over there, in front of your palace, has come a knight whose man I am, and he has brought with him one of the most beautiful and most noble ladies in the world. He has come on this occasion because he knows for certain that all the noblemen in your reign are here, and he informs them that he brought this lady because he wants to joust with them. And he informs all of them who wish to win a beautiful lady that they will have to joust against him; whichever one of them is able to unhorse him will win the lady, who is truly the most beautiful lady in the world. But he also informs you that there are not enough knights here to unhorse him; and this is what my lord sends me to tell you." At that he fell silent, and said no more.

And when King Arthur and all the other kings and lords there present heard all what the youth said to the King, they were much amazed, and said that the knight was very audacious. At that they did not hesitate, but went immediately to the palace windows and when they saw the knight and the lady so exquisitely dressed, they were greatly astounded, and they concluded among themselves that the knight and the lady must be of great importance. And Queen Guinevere and many other queens and ladies, having heard the youth speak thus, ran to see, and they marveled greatly at the richly dressed lady.

[19] Obviously the youth's "task" is going before King Arthur to relay Branor's message.

Very soon after, Lord Palamedes stepped forward and said: “My lord King, know that I love beautiful ladies very much, and I would mostly willingly win this one, if it please you.” The King answered: “Sire Palamedes, it does please me for you to go and win the lady, by unseating this knight, so that he may realize the great arrogance he has shown towards us.” And without further hesitation Lord Palamedes, as soon as he had the King’s leave, quickly armed himself with the help of many noblemen. When he was exquisitely armed, he left the hall, and mounted a good horse that his squire had prepared for him. He rode towards the knight, who in the meantime, was waiting in the middle of the square for the knights to come and joust with him.

(5) And when Lord Palamedes reached the knight, who asked him who he was; Palamedes answered, “Sire,” said he, “my name is Palamedes, and I am the son of Esclablor the Unknown.”[20] “Sire,” asked the other knight, “are you really Palamedes?” “I have already heard you spoken of many times, and you have the fame of being a valorous knight. But I tell you that I do not know you to be such a good knight that I wish to take up the lance for you; instead, I order you to take your distance from me, and come strike me with all your might: I will be your quintain. If you succeed in unhorsing me, you will have won the lady whom you see here. If you truly have enough strength to unhorse me, you will not ask me to joust or fight any longer. And I will do the same with all those who are still inside the palace.” Lord Palamedes, hearing him speak in this way, was very indignant, and said angrily: “Sire knight, you speak very haughtily, but you will immediately be tested; and I think you will need both your shield and your lance.” They said no more; Lord Palamedes moved about a hundred feet, lowered his lance and

[20] West, “Esclabor(t),” 106. Although Rustichello or the scribe of BnF MS fr. 1463 actually writes “Esclablor” he most certainly intended “Esclabor,” the father of Palamedes.

spurred his horse.[21] Then he launched himself against the [other] knight who had only his shield, for he had not taken up his lance. What can I say?[22] Lord Palamedes charged with such speed that he didn't seem a knight, but thunder and lightning.[23] He struck his adversary with great boldness, and when the lance hit, he made it strike the shield with all his might, but it [the lance] splintered. After that, the knight struck my lord Palamedes so violently on his shield, his body and face that he fell to the ground along with his horse, so dazed that he didn't know if it was night or day. The knight, for his part, did not budge an inch;[24] on the contrary, he remained more anchored than a marble column planted in the ground.

And when King Arthur and all the other kings and lords saw how the joust had gone, and how the knight had not taken up his lance, and that Lord Palamedes had been unhorsed in that way, they were all dumbfounded. They said that the knight was truly the strongest man they had ever seen in their lives. And my lord Gawain, who had certainly seen how Lord Palamedes had been defeated, and had heard the knight's message to them, was very angry. He had his arms brought to him immediately and quickly was armed by the other noble men who were there with him. And when he was armed and equipped, he went out of the hall, and mounted his strong and fast horse; once he was mounted he went straight for the knight. When they were in front of each other, Lord

---

[21] Rustichello writes "bien dimi arpant." An "arpant," according to http://www.convert-me.com/en/convert/history_length/farpent.html an arpant is about 191 feet, so half or "dimi" arpant is 95.5 feet which I have made "100 feet." for the sake of legibility.

[22] "Que vos en diroie?" or "What can I say?" is a frequent locution much employed by Rustichello and found frequently in Arthurian prose literature. Rustichello uses this locution 14 times in the 39 episodes of Branor le Brun (See *Il Romanzo*, 5:10, 6:5, 14:3, 14:14, 19:10, 19:25, 21:22, 22:20, 23:9, 23:19, 23:29, 25:21, 32:22, and 37:1.

[23] Frequent hyperbolic expression used by Rustichello. "Foudre et tenpestes" or "lightning and storm," I have translated it to the more common English expression "thunder and lightning." (See *Il Romanzo*, 5:10, 6:9, 8:4, 13:8, 23:17, 29:5, and 32:3).

[24] Here I chose the idiomatic expression "budge an inch" over the Franco-Italian "se mue ne pou ne grant" or 'not moving a little or a lot" because this renders better the idea of Branor's complete immobility in the joust (*Il Romanzo,* 5:13, 6:6, 14:14, and 29:2).

Gawain did not salute him, and when the other knight asked him who he was, he responded, visibly furious: "Vassal," said he, "my name is Gawain, and King Lot of Orkney was my father." And when he heard that this was Lord Gawain, King Arthur's nephew, a noble and valorous knight, he said to him: "Sire Gawain, everyone says that you are a valorous knight, but I tell you that since I am a such a knight that I will not take up the lance for you, and I will be the quintain just as I did with Lord Palamedes; if you can unhorse me, you will win the lady." "I know nothing of your shield or your lance," said Lord Gawain, "but I will do my very best to unhorse you immediately."

(6) After this exchange, without further delay Lord Gawain distanced himself from the knight by a good bow-shot, he lowered his lance, spurred his horse, and came towards the knight with all the speed he could get out of his mount; he [Gawain] hit him on the shield with all his might, and shattered his own lance. After it shattered Lord Gawain crashed into the other knight so hard that, in the face of so much force and resistance from the other knight, he fell to the ground in a most shameful way, while the [other] knight remained as unyielding as before. And this time King Arthur and all the other knights were even more astounded, because in truth you must know that everyone considered Lord Gawain to be a valiant knight. Queen Guinevere and all the other ladies and maidens of the court, when they saw these two jousts, were also most amazed.

What can I say? The third knight came forward and it was Lord Lamourat of Gales,[25] valiant knight and astoundingly powerful--few in this world are more so. He, too, shattered his lance against the knight, who would not budge an inch.[26] The fourth knight was Lord Gaheriet, brother of my lord Gawain, he too a valorous knight;[27] the

[25] See fn. 15 of this Appendix 1 for entry on "Lamorat."
[26] See fn. 24 of this Appendix 1 for this expression.
[27] West, *Index*, "Gaheriet," 121-22.

fifth was Lord Bohort of Gaunes;[28] the sixth was Lord Yvain, the son of King Urien;[29] the seventh Lord Sagremor the Impetuous;[30] the eighth Lord Bliobleris of Gaunes;[31] the ninth Sigurades, a knight of great fame;[32] the tenth Saphar, the brother of Lord Palamedes, the best jouster with a lance that could be found near or far;[33] the eleventh Lord Hector of les Mares, brother of Lancelot du Lac, he, too, an expert jouster;[34] the twelfth was Lord Givret of Lanbelle.[35] All twelve of these knights went to strike the knight one after the other, and he played quintain to all of them; all shattered their lances without budging him from his saddle. Instead, of these twelve, nine fell, to the great dismay and amazement of all the court, and everyone thought that the knight was not just a knight, but thunder and lightning.

How my lord Tristan was defeated by the Old Knight

(7) When my lord Tristan saw so many of his companions unhorsed, and especially those whose chivalry he admired so much, he was enraged and could hold back no longer. He said: "Now let it go as it may, for I will go and joust against this knight to avenge my companions' shame, if I am able. At least I can see with absolute certainty that he is the best knight that I have ever heard talk of in all my life." He armed himself quickly with the help of many kings--King Arthur himself and Lord Lancelot helped to arm him.

---

[28] West, *Index*, "Bohort of Gaunes," 44.
[29] Ibid., "Yvain," 308-11.
[30] Ibid., "Sagremor," 270-71.
[31] Ibid., "Bliobleris," 42.
[32] Ibid., Seguran(t), -rans, ranz, var. Seguradés, Sigurant, 277.West aptly notes the great confusion with this name in both Rustichello's *Compilation* and also the *Guiron le Courtois.*
[33] Ibid., "Saphar," 273.
[34] Ibid., "Hector of les Mares," 155-56.
[35] Ibid., "Girflet," 138.

When he was well-armed and equipped, he went down from the hall, mounted a good horse strong and fast, and he went towards the knight. As soon as he reached the knight, Lord Tristan, who was a most courteous knight, greeted him. The knight returned the greeting very politely,[36] and asked who he was. "Sire, he answered, those who know me call me Tristan of Leonois," to which the other knight said, "Ah, Sire Tristan, you are very welcome here, as the best knight in the world. And I tell you truly that I would willingly refuse to joust with you, because of all the good things everyone says about you. But my lady over there, whose servant I am, forbade me to refuse to joust with anyone from King Arthur's household. However, for the respect I have for your high valor as a knight, I will do you the honor of taking my lance." He then called one of his squires, and had him give himself a good lance, short but robust. At this they took their positions about two hundred feet apart.[37]

(8) And when King Arthur and all the other kings, lords, and ladies saw the knight get into position, they shouted with one voice: "Now we will see a fine joust, for it is Lord Tristan of Leonois who will joust against the powerful knight!" And when the two knights were in position, without further delay they lowered the lances and spurred their horses. And they came towards one another so fast that the earth under them seemed to sink; their horses were strong and fast, and the knights riding them were valiant and strong: they came at each other with such force that they seemed to be thunder and lightning. And when their lances crossed, they struck each other's shields with all their

[36] "bien et sajemant" or "well and graciously" is a near synonymic phrase frequently used by Rustichello. I've translated it two different ways according to context. Here since Rustichello just mentioned Tristan's courtesy toward Branor, I feel that Branor would logically return his salutation in the same fashion, i.e., very politely.

[37] In this case, "bien un harpant" or a "harpant" which would be around 200 feet. See also fn. 21 of this Appendix 1.

might. Lord Tristan's lance shattered and the knight struck him so hard that he destroyed his shield and hauberk, and drove the iron tip of the lance into his left shoulder, giving him a great wound. And the knight drove Tristan to the ground so broken that he could move neither hands nor feet, but lay on the ground as badly injured as if he were dead. The [other] knight [then] passed by Tristan to finish his charge. And when all those standing at the windows saw Lord Tristan lying on the ground in that way, a cry went up so loud that no one would have been able to hear God himself thunder.[38]

How King Arthur and my lord Lancelot were defeated by the Old Knight

(9) And my lord Lancelot, after seeing so many of his companions fall to the ground, and now Lord Tristan, his dear friend, lying on the ground as if he were dead, became so angry that he nearly died of affliction.[39] He said that even if the [other] knight were to be the strongest and most redoubtable knight in the world, he was willing to risk himself in order to avenge the shame given to his companion; if he did not do everything he could, people would consider it cowardice. He had his arms brought, and was armed in a hurry with the help of many noblemen. When he was armed well and exquisitely, he went down the steps from the hall, mounted a good horse and went towards the knight. At this point a great cry went up from all who saw him go: "Now we can see my lord Lancelot put to the test with the valorous knight!"

And when Lord Lancelot was before him [the knight], he greeted him, and the other knight returned his greeting courteously and well. "Sire," said the knight to my lord

[38] "que l'en ne hoist le Deu tonant" or "not able to hear God thunder" is a hyperbolic expression often used by Rustichello to describe the loud din of a joust or a battle see Cigni, *Il Romanzo,* 8:9, 13:2, and 22:19.
[39] "car pou qu'il ne muert de duel"or "he almost died from the pain/affliction" is another hyperbolic expression often used by Rustichello. See Cigni, *Il Romanzo,* 381 and *Il Romanzo,* 9:1, 13:2, and 32:6.

Lancelot, “who are you, who wish to joust with me?” “Sire,” said he, “my name is Lancelot du Lac, son of King Ban of Benoïch.”[40] When the knight discovered that this was the most valorous knight Lord Lancelot, the man whom he had heard spoken of as the greatest in chivalry, he said to him: “Ah, Sire Lancelot! In every part of the world you have great fame, and truly God helps me, since I’ve had a great desire to joust with you; now by God’s grace the time has come. And I will do for you what I did for LordTristan, for I will take up my lance for you.” “Sire knight,” said Lancelot, “you have asked my name and I have courteously given it to you; so I beg you, for the sake of chivalry, to tell me your name and your condition.”

(10) “Sire Lancelot,” said the knight, “you cannot know my name because at this time it is forbidden me to reveal it to you, just as it was with the others. But I tell you that in a little while you will know my name, but know that when you do, it will not mean much to you.” And when Lord Lancelot heard the knight’s words, and realized that he did not want to tell his name, he was very displeased. With no further delay, they placed themselves at a distance, lowered their lances and spurred their horses, racing towards each other like the wind, their lances down. And when their lances crossed, they struck each other’s shield with all their might. Lord Lancelot shattered his lance, and the knight struck him so hard that neither the shield nor the hauberk kept the tip of his lance from going into Lancelot’s breast, bringing Lancelot to the ground very shamefully, and wounding him very deeply. The knight went past to finish the charge, while Lord Lancelot lay on the ground in a faint, like a dead man. And when King Arthur and all the others, and my lady Queen Guinevere and the other ladies saw this, if at first they had

[40] West, *Index*, “Ban of Benoïch,” 30.

raised a loud cry, now they raised an even greater one for the sake of my lord Lancelot, for they feared that he might be dead.

(11) At this King Arthur ordered his arms to be brought to him immediately. And when Queen Guinevere understood that her husband was ordering his arms, she came quickly towards him and fell down at his feet saying: “Oh, my lord, I beg you, for the love of the sweet Mother of God, have pity on yourself! What do you mean to do? Go toward your own death? Don’t you see that many noblemen have already been defeated by the knight? And yet you want to go to your death? Know truly that if you go to fight, I will kill myself with my own two hands!” The King had her taken from his presence, saying that he would not change his mind for anything in the world. And when all the other kings and lords saw that their Lord King Arthur really wanted to fight against that powerful knight, they all said to him: “Sire know truly that what you intend to do is madness, for such a man as yourself, on whom so many people depend, [and who] now wants to risk [himself] in a task that so many valorous men have failed in; you could fail to the point of harming the entire world.”

(12) “Lords,” answered the king, “know truly that I will not give up the idea for anything in the world, not even my entire realm.” He swore as earnestly as he could that he would go at once, and ordered very angrily for his arms were brought to him immediately. And when they all saw the intention of their lord [to joust], they had to obey his orders; they quickly brought him his arms and armed him as best they could. And when all the other kings and lords saw their lord King being armed, the other fourteen kings there present also called for their arms to accompany King Arthur. And when they were well and exquisitely armed, they went down from the hall, and mounted their horses. And after

they were all equipped and armed, King Arthur went all alone towards the knight, without anyone else accompanying him. And when the people of the court saw the king, their lord, going into such danger, that is, to joust against the powerful knight, they were very anxious and afraid, and all began to pray to God and His sweet Mother to defend him from danger and return him to them safe and sound. The women who were watching from the windows were all seized with pity, and all were praying to God and his Mother [to] aid and protect him.

But the queen, instead, could not bear to see her lord exposed to such a risk; so she went to her room, and in desperation, threw herself on her bed, a victim of despair and great pain. She would have done something far worse, if the other women had not been with her, lovingly assisting and comforting her.

And when the king was before the knight, he did not greet him, but rather said in great anger: "Perhaps you are a ghost or a magic spell, come to bring dishonor on all my court?" "What," said the knight, "are you the lord of this court?" "I am indeed the lord!" said the other, "You are King Arthur then?" asked the knight. "Certainly I am Arthur, King of the Britons, and I will cause you shame and dishonor!" And when the knight was certain that this was the lord King Arthur, the man who was considered to be the greatest nobleman in the world, he said to him in a courteous tone: "My lord King Arthur, you are wrong to inflict upon me shame and dishonor. Know truly that I was a great friend of your father, King Uther Pendragon,[41] and that I did more for him than any other knight of his court; and for love of your father I feel great love also towards you. And I would gladly refuse to joust against you if I could, and I would tender you my sword. But, may God help me and judge me kindly on that blessed day, in truth I cannot; nonetheless, know that I will joust with you against my will."

[41] West, *Index*, "Uterpandragon," 298-99.

When the King Arthur, hearing the knight speak in this way, and that he was his father's friend, he immediately thought that he must be one of the old knights of his court, and he said that he wanted to know the knight, if at all possible. Then he said to him: "Sire knight, you have told me that you were a friend of my father, and now to me; but you are doing a bad job of showing this, since you have come here to bring shame to all my court! Even so, since you affirm that you are a friend to me as you were to my father; I pray that you tell me your name and your condition." "Sire King," answered the knight, "know truly that my coming to court will not cover it in shame, because when you know everything, your court will receive honor, and not dishonor. But my name and condition you cannot know right now, though I promise that you will know it shortly; and I pray, as I would pray a friend and my lord, not to be displeased by the fact that I hide from you who I am."

And when the king understood that he could not learn the knight's name, he cut short the discussion, and he distanced himself from him as much as was necessary. The knight, seeing that King Arthur had distanced himself to joust, decided reluctantly that out of respect for royalty, and because he knew the king to be a man of the greatest nobility and valor, he would grant him the honor of jousting with a lance. He thus prepared [himself] for the impact. And when the king and the knight were ready, without delay they both spurred their horses. The king came forward with his lance lowered, as fast as he could urge his horse. Both charged very boldly, and when the[ir] lances crossed, they traded blows on their shields with all their might. The king shattered his lance, and the knight hit him so hard that he brought the king to the ground very shamefully, giving him a great wound in the middle of his breast. And the knight passed by, to finish his charge.

(13) And when all the other kings, lords, knights, queens, ladies, and maidens saw King Arthur, their lord, lying on the ground in that way, they thought that truly he must be dead. This provoked such pain that they all almost died of grief; they beat their hands, raised screams and cries so great that no one could have heard God Himself thunder.[42] And Lord Gawain, Lord Lancelot and Lord Tristan, and all the other knights who had been beaten, and who by now had got up, seeing their lord lying on the ground in that state, feared that he may have been knocked senseless.[43] Quickly they moved to that spot, and they took off his helmet so he could breathe.

And the king opened his eyes, sighed deeply and said: "Oh Lord God, help me!" Lord Gawain, along with many others, asked him how he felt. "Lords," said the king, "know in truth that I have been gravely wounded, and I assure you that in all my life I have never been hit with such violence. In truth, if that is an earthly knight, you can be certain that he is the most powerful knight that I have ever seen. But without doubt I do not believe that he is a knight, but lightning and storm; we can be absolutely certain in fact that we have come across a knight that excels in the joust [more than] anyone who has ever taken up arms, in either the present or the past. And if he is as expert a knight with a sword as he is with a lance, then one can consider him without an equal in the entire world."

(14) While they was speaking of the knight amongst themselves, King Karados came forward, armed to the teeth and exquisitely adorned, as is fitting for a king. King Arthur,

---

[42] See fn. 23 of this Appendix 1 for more on the use of this expression.

[43] "desviés" from the verb "desveer"/ "desvier" has a variety of meanings. This verb can mean "to go mad," "to lose one's mind," or "to take leave of ones senses," and is only in BnF MS fr. 1463. The other texts give "mors" or "dead." See entry for "desver, derver, desvier, desvoir" in Greimas' *Dictionnaire,* 175.

Lord Lancelot, and all those present, having recognized him, thought: "Now King Karados comes to join our company."

What can I say? King Karados, after he had seen how many noble knights that knight had succeeded in unhorsing, went towards him with great apprehension. And when he was in before him, he saluted him with respect and the knight returned the salute courteously, thinking well that he was a man of great valor, judging by his rich dress. And he asked him who he was: "Sire," said he, "King Karados is what those who know me call me."[44] And when the knight heard that he was King Karados, he decided for respect to his crown to honor him by jousting with his lance, and said to him: "Sire, are you really a king?" "Certainly," said the other, "and all those who see my horse armed over there, waiting to joust with you, are also kings." After this exchange, without waiting any longer took up their positions, lowered their lances, and spurred their horses boldly. And when their lances crossed, they hit each other's shields with all their might. King Karados's lance shattered, and the knight hit him hard and made him fall to the ground terribly injured, just as he had done with all the others. Then he raced past to finish his charge.

After King Karados was unhorsed, not much time passed before King Yon of Ireland arrived armed and mounted very exquisitely.[45] He too went to joust against the knight, and shattered his lance, and the knight reduced him to the same state in which he had left the other knights, throwing him to the ground wounded to the point of death. And then came King Aguisant of Scotland, and he, too, was left like the others, and was thrown to the ground gravely wounded.[46] What can I say? Know that in truth, all fourteen of those kings who had been armed with King Arthur, went to joust against the knight,

---

[44] See "Karados" fn. 3 of this Appendix 1.
[45] West, *Index* "Yon," see fn. 5 of this Appendix 1.
[46] Ibid., "Aguisant," 8-9.

and all shattered their lances, without being able to budge the knight an inch from his saddle.[47] The knight in fact brought all of them to the ground very cruelly, for you should know that most of the knights were gravely wounded. And when the knight had defeated all these kings, lords, and noblemen in the way I have told you, he waited a long while to see if anyone else would come forward to joust against him. But seeing that no one was coming forward, he removed his leather shield from around his neck, [and it] was half again as large as the shields of the other knights, and it was half black and half white, and he handed it to his squire, along with his lance. Then he went to where King Arthur was with all those knights he had defeated.

(15) And at that he spoke, and said, "Sire King Arthur, you should know truly that it's more than forty years since I have borne arms, and I have been living a very solitary life, and now I am more than 120 years old. But I had a great desire to test your knights before I left this world, so great was the fame of their valor in chivalry all over the world. So I wanted to see the strength of the knights of this age, to know which were better knights, the old or the new. Now I have tested them, thanks be to God, and I can assure you of one thing: a long time ago I knew two knights, who died long ago, who would have unhorsed, one after the other, all the knights of your court, even if there were two hundred of them. And I want to tell you the names of these two: one, the older of the two, was Lord Hector le Brun, a more accomplished, strong and valorous knight than any other in his time.[48] The other was Galehot le Brun, son of Lord Hector; truly he was, without a doubt, a knight of great valor, certainly the best in the world in his time. Of the others I will not

[47] See fn. 24 of this Appendix for this expression.

[48] Rustichello gives the name "Estor le Brun" but most likely he intended *Hector* le Brun. The reason for this is that Estor was the half-brother of Lancelot so he belongs to the "new" table of knight. But when Branor is speaking, he is talking about knights in the older generation or from the "old" table of knights. See West, *Index,* "Hector, var. Estor, Hestor," 155-156.

speak; there were those younger and those older, like Febus,[49] who was superior to everyone in the perfection of chivalry." At this, the knight fell silent, and said no more.

"Sire knight, said the King Arthur, "we have had sure proof that you are the best knight and the most valiant that we have ever seen in our lifetime, and thanks to you we are able to clearly see that the men of the older generations were better and more valorous that those who now live on earth, and we believe everything that you have told us. But I would beg of you, in the name of friendship and the honor of chivalry, to tell us your name, and who you are, because you must know that we very desirous to know it. Lord King," said the knight, "I beg you lovingly to not be grieved by the fact that I cannot tell you who I am now. But be certain that I will let you know it before much time has passed, and for now just know that I am your friend and that wish you well." And when the king and the lords there present heard the knight's will not to reveal his identity, they said to him: "Sire, since you will not tell us who you are, at least do us the favor, out of kindness and for love of chivalry, to stay with us for two or three days; you could then tell us more of the brave knights of old." "Lords," said the knight, "know in truth that at this time I cannot stay here with you, and do not be grieved at this, because I cannot do otherwise just now. But I give you my word as a knight that I will let you know all about myself in a short while." At this the knight at once took his leave of King Arthur and all the other kings and lords, and he started off on his way with the lady and his squires, riding towards the forest of Camelot.

But now the tale is silent for a bit about the knight, it will return to him soon, and it turns to telling of King Arthur and all the other kings, lords, counts, and knights there present.

---

[49] West, *Index*, "Febus," 112.

(16) Now the story says that when King Arthur and all the other kings, lords, and knights had been defeated, when they saw the knight and his lady had left, they all met in the great hall of the palace. They all disarmed, and immediately sent for the best doctors in the city. The [doctors] went first to see King Arthur, and they found his wounds very serious. They washed and bandaged him as best they could, and said that his life was not in danger, and that they would heal him in a short while. After this they checked on Lord Lancelot and Lord Tristan, and the other kings and lords, and they washed and bandaged their wounds, and found that they too were seriously hurt, but the doctors assured them that no one had life-threatening wounds.

And when all were bandaged and treated, the king said to his lords: "My lords, today you were witness to the greatest adventure that ever happened on earth in our times, in our very court, at which we can marvel even more greatly. Now I beg each one of you to tell me if he knows the name or thinks he knows the identity of this knight, although I believe that he's is not a knight, but some form of magical spell. However, it is also true that he told us many ancient things, and spoke to us of many old knights, giving us faith that he is an earthly knight. And yet I cannot believe that he is, and for this I ask you all if anyone knows who he is." At this Lord Lancelot, and Lord Tristan, and many other lords and knights responded, saying: "Sire King, know in truth we too are greatly astonished by the events that happened today. And we can very bold say that today we met the best and strongest knight, and he accomplished the greatest wonder that any knight ever did in the past or in our time. This in truth is the most extraordinary adventure that has ever happened in the realm of Logres, and without a doubt it should be written in the adventures of the Round Table. For even though it does not honor us, but shames us, still it should be written among all the adventures of the world. As to the knight, we must tell you truly that we do not know who he is, nor can we imagine who he might be, but

we can tell you that he is the best knight that a mortal man has ever seen." They wondered for a long time who he might be, and discussed these deeds at great length. The king sent for a clerk and made him write [down] all this adventure from start to finish. Only the name could not be recorded, because no one knew it. But the book will tell it to you later, and you should know that truly this story and adventure, if someone was paying attention to the order of things, would not be written in the beginning of this book, where instead one should find other adventures in its place that happened before it. But because master Rustichello found it in the beginning of the King of England's book, he made it the opening of his [own] book, because it is the most beautiful and wonderful adventure ever written in all the romances of the world.

But now the story no longer speaks of King Arthur and of all the other kings and lords, and the master turns to narrating a great adventure, and will speak of the Old Knight, and of a maiden who follows him.

Here is narrated how the Old Knight accompanies the maiden of Listinois, and how he freed her and her mother.

17.) The tale says that in Camelot, at the court of King Arthur, a maiden had come from the far-off land of Listinois, and had stayed in Arthur's court for a full month, and every day she asked him for help. For I will tell you that this maiden was the daughter of an old lady, who was the sister of Lamorat of Listinois. This same mother had sent the maiden to ask King Arthur for help, because a powerful count, a neighbor of theirs, rich in wealth and lands, had taken from them many castles and much land – because the lady no longer had a lord or a man who could defend her --, and he had put her castle under siege with a hundred knights [inside it]. And the count, for fully half a year now, had besieged that

castle with the help of four hundred knights and had sworn on the Saints that he would not leave until the castle fell into his possession. The lady had consulted her men, and they had advised her to send to King Arthur for help. So that King Arthur might pity her the more, she should send her daughter to him. For this reason the maiden was at King Arthur's court and had often asked for his help, and the King had assured her that he would give her help and aid. And when this maiden had stayed at court, as you've just heard, and this adventure of the valiant knight occurred, and the maiden had seen the great feats accomplished by him, she, like the wise maiden she was, said to herself that this knight could well assist her mother. Without delay she immediately mounted her horse, taking with her two young serving-men who had accompanied her. She did not even take leave of the King, but set off down the road that she saw the knight take. And she rode so fast that she caught up to the knight and the lady.

And when she had reached him, the maiden dismounted from her palfrey, and she threw herself on her knees before the horse of the knight, begging him to listen to what she had to tell him. The knight, seeing the maiden on her knees, begging him so pitifully, felt great compassion, and said to her: "Dear sweet *amie*, get up at once, and ask me what you will; I swear to you faithfully that I will do everything in my power to help you."[50] So the maiden got to her feet, and said to him: "Oh, noble and courteous knight, take pity on me and my mother, who is very old, and bring remedy to my situation! We are, you must know in truth, the most desperate ladies in the world, and those to whom the greatest wrong has been done." The knight, hearing the maiden talk in such a way, felt so much compassion for her that tears came to his eyes, and he said to her: "Now, maiden, tell me what has happened, and I swear to you faithfully that I will withhold all the help

[50] Since "amie" has a variety of different meaning in French from friend to beloved, I have left this term in the original language.

in my power." "Many thanks," said the maiden, "and I will tell you immediately." At this she began: "Sire, it is true that I have a mother who is very old; she was the sister of Lamorat of Listinois, who died in the time of Uther Pendragon.[51] And when he died, he did not leave any children, so that all his lands came to my mother, and after his death she ruled them for a long time in peace. Recently a very cruel count has come to power in my country, and his lands border ours. This count, because he is young and not as prudent as he should be, is a cruel man, and he is also very powerful, in both lands and wealth. And when he saw that my mother has neither lord nor man who can defend her, he has attacked our lands. And being more powerful than we are, he has succeeded in taking from us many castles and lands; only one is left to us. Hence he came with all his forces, and has laid siege to the castle with four hundred knights. My mother is inside, and she has with her one hundred knights. As when my mother saw herself in this horrible dilemma, she sent me to King Arthur to ask for help.

And the King assured me that he would find a remedy to my situation. But when today I saw your great deeds of chivalry at Camelot, I said to myself that I could not find better advice and help than yours. Thus I followed you, and thanks be to God I have found you. And I implore you, by the sweet Mother of God, to come with me to rescue my mother from that evil man."

18.) "Maiden," said the knight, "I'll have you know that I did not take up arms for over forty years, until today, and it was only to do what you said you saw; with arms in fact I want nothing more to do. But when I see you in such great danger and without help, it forces me to change my mind, and I tell you that I one who will change his intention and

[51] West, *Index*, "Lamorat," 186. Not to be confused with the "Lamourat" who is a knight from the younger generation and who was in Camelot at the feast of Pentecost when Branor made his entrance in Episode 3. See also fn. 15 of this Appendix for "Lamourat."

I want to take up your cause. There is yet another thing, then, that makes me do it, and this I want you to know that Lord Lamorat of Listinois was my good friend. For this reason also, be assured that I will take your cause upon myself, and I will do everything possible to help you." "May the Mother of God reward you well for it," said the maiden.

At this she mounted her palfrey, and set out with the knight, and they rode all that day until evening. And when evening fell the knight had [his servant] erect a very fine pavilion in the middle of the forest, and there they passed the night, and they had everything that was necessary for them and for their horses.

19) The next day they arose early in the morning and remounted their horses. They rode all day, without having much adventure worth the telling, until they reached the very remote land of Terre Foraine, where they stayed for three days.[52] On the fourth day they remounted their horses, the knight with his three squires and his lady with her three serving men. After that knight commended the lady to God, for he did not take her with him, they set out on to their way. And they[53] rode for a long time without pausing until they reached the land of Listinois, three leagues from the castle; there they waited until evening. And when night came, they rode to the castle. And the maiden, knowing the best place at which they could enter the castle, led him inside the castle, without those who were outside [the castle walls] noticing in the slightest. And when they were inside, they went toward the guard tower, where they dismounted. And when the mother saw her daughter, she rejoiced, and also to see the knight, though not as much if she had known who he was. What can I say? The lady had an exquisite dinner prepared, and they ate and drank to their heart's content.

---

[52] West, *Index,* "Terre Forain(n)e, 288-289.

[53] For clarity, those riding or "chevaucent" are the Old Knight, the maid of Listinois, and their servants. See *Il Romanzo,* 19:5.

And when they were still at the table, the lady and the others there present, watching and scrutinizing the knight, were very surprised to see that he was so old, and at the same time very huge and robust. And when they had eaten and the tables were removed, the lady took her daughter to her room, and had twelve knights called – the wisest that were there in the castle -- without the Old Knight being present. And when the lady and these knights had entered into her chambers, the mother said to the maid: "Dear daughter, would this knight be the help that King Arthur sends us? You have ill secured help for us, it seems to me, because I was expecting you to bring Lord Lancelot du Lac, or Lord Tristan of Leonois, or Lord Gawain, King Arthur's nephew, or Lord Palamedes the Pagan, or at least twelve of the best Knights of the Round Table. Instead you brought me an old knight, so old he seems to be over a hundred years old! You have done very poorly what I sent you to King Arthur's court to do." And when the maid, had heard all that her mother said to her, she answered: "Mother, have pity, for God's sake! Wait to malign me until you know better that which you do not know. I tell you truly that I brought you better help than if I had brought you twenty of the most valorous knights in the whole court of King Arthur. Know without any doubt that I have brought you the best and mightiest knight in the whole world, for I tell you truly that I saw him perform the greatest feat of arms that any knight ever performed, either in history or recently. For know truly that I saw him strike down in one day more than thirty of the best knights of Arthur's court. And among them were Lord Lancelot du Lac and Lord Tristan of Leonois; and Lord Palamedes the Pagan and Lord Gawain, and my lord King Arthur himself, whom I should have mentioned first; lords Hector of Mares and Lamourat of Galles; and so many other knights between kings, lords, and knights of great fame, that there were fully thirty of them. And from this, rest assured that he is the best knight in the world."

And when her mother and the knights there present had heard what the maiden said, they were overjoyed at it, and promised to show great honor to the knight. At this they all returned to the knight, and the lady and all the others humbled themselves before him, and offered him their service and deference. What can I say? The lady had no further discussion with the knight, because he was very tired, and she had him taken to his room, and the servants prepared a bed with every honor. And everyone slept peacefully until daylight.

20.) And when morning came the knight got up, and went to hear the mass of the Holy Spirit. The tables were brought in, and food was prepared to eat, and the majority of the knights of the castle ate in the main hall. And the old lady and many other ladies and maidens were in that same hall, but they were certainly sitting at different tables than the knights. And everyone was very happy, and was praising the Old Knight, honoring him more than if he was King Arthur in person.

And when they had finished eating and the tables were removed, and all the ladies and maidens of the castle were gathered in that hall, the good knight rose to his feet, and spoke in this way: "Lady, I came to resolve your cause; your daughter has given me to understand that this count outside these walls has seized your lands, and now wants to take possession of this castle of yours, and that he has no right to all this. Thus I would like to know from you and from the gentlemen here present if things are really as the maiden has told me." At this the lady answered, and said: "Sire knight, so help me God and his Mother, and give you the power to arrive at the head of this affair, things are exactly as my daughter explained them to you." And after the lady, many knights confirmed that "truly it is just as our lady and her daughter have told you." "Then," said the knight, "I will fight with more conviction, knowing that right is on your side. You

must know in fact that he who has the right on his side, [has God with him, and he who has with him such a Lord as [his] companion and on his side, can fight with confidence. For this, my lord knights, because right is on our side, and with us is a champion such as our Lord God, we can fight against our enemy confidently. Because even if our enemies were half as many more as they are not now,[54] with the right we have, and the good champion [God] on our side, I assure you that we will be able to put them to flight. I also advise you that tomorrow we go to battle to fight our enemies." With this, the knight fell silent, and said no more.

21.) And when the knights of the castle had heard the words of the knight, they told each other that he was truly a wise man, and that he had spoken very well. They said they would follow every one of his orders, and do no less as long as they had life in their bodies. And when the Old Knight saw the good will of the castle knights, he felt great joy in his heart on account of it. He immediately called a youth, and said to him: "You will go at once to the count, and tell him that I am a very old knight who has not taken up arms for more than forty years; but because of the great outrage that I have learned he is doing to these ladies, I have come here. And tell him if he wants to give the lands back to these ladies, and lift the siege on their castle, I will be very pleased. If he will not do this, then let him know that I will attack him tomorrow, and he should prepare himself, for he will see me on the battlefield defending the rights of these ladies." The youth responded that he would follow his orders to the letter. At this the youth left and set out, riding straight to the open field. He dismounted at the count's tent, where he found him in the company of many knights.

[54] This is an odd expression to render in English. "Car c'il fussent de la moitié plus genz qu'il ne sunt." Or basically if there were a half more men than what the count has now, i.e. 600 instead of his 400, Branor and the men of Listinois would win the battle because they are fighting for a just cause. See *Il Romanzo,* 20:12.

The youth greeted the count very courteously, and the count bade him welcome. "Sire count," said the youth, "the knight whose man I am sends these words to you: I must let you know that he is a foreign knight, who is over a hundred years old, and for more than forty years has not borne arms. But after he found out about the great dishonor and wrong that you are doing to these ladies, he went to their castle. And he informs you that if you want to give back to these ladies all the lands you have taken, and lift the siege on their castle, he will be very pleased. But if you will not do this, then he lets you know that he will come tomorrow to fight you and your men. And he informs you that, even if you had a half more men than what you have now, he believes he can defeat you, since he knows that the lady is in the right; this is what my lord commanded me to tell you." When the count heard what the youth had told him, he did not take any of it seriously, and he told the youth to return to his lord to tell him that if he were mad, his madness could lead to great ruin. And when the youth heard the count's answer, he could not refrain from saying: "Sire count, tomorrow you will see if my lord is wise or mad." At this, the youth left without taking leave of the count and rode until he reached the castle, where he found his lord and told him word for word all that the count had said. At this the Old Knight said then to the knights in the castle: "Lords, we acted properly, and we have right on our side. Thus I ask that each of you to prepare today and tonight all that is necessary for mortal combat, because tomorrow we will try ourselves against our enemy; and I ask each one of you be valiant, and to disregard death entirely in defending a just cause!" The knights answered that they would do everything in their power.

What can I say? All over the castle great preparations were made for everything they knew would be necessary. That night everyone slept very little, awaiting with great apprehension the next day, when they would fight against so many strong and valorous men.

22.) And when the next day came, all the knights got up, and went to hear the mass of the Holy Spirit, and they repented their sins. Then they armed themselves as best they could, and mounted their horses. And when they were mounted and equipped, the Old Knight made them arrange themselves in only one rank of troops behind one standard, conducted by an expert commander. After this, they left the castle, and went toward the count's battlefield.

And the ladies, the maidens, and the youths, and every inhabitant of the castle not bearing arms, went on top of the crenellations of the wall to watch the battle, praying that God and his Mother in their mercy would give their men the honor of victory.

And when the Old Knight and the others who were with him, who might have been as many as one hundred men, were a crossbow shot away from the battlefield, he ordered the standard to halt. All of them followed the orders of their lord, stopping where they were. And why did the Old Knight make them stop in this way? Out of magnanimity, for he had seen that neither the count nor his men were ready yet, and it seemed to him a very cowardly act to attack while his adversaries were still unarmed. And for this reason the knight made his men stop, so that the other men could prepare; for the count had made no preparations, for he had not believed a word of what the Old Knight had said. And when the count and his men saw the forces of the castle in battle formation, they all shouted "To arms, to arms!" They armed themselves and quickly mounted their horses. And when they were armed and equipped, the count divided them into two ranks, each one comprised of two hundred knights, and each one guided by an expert commander. At once they began to advance on the men of the castle with much

prudence,[55] one rank after the other. And when the Old Knight saw the count and his men arrive, he urged his men to attack their enemies without fear. These [men], as soon as they received the command from their lord, delayed no further, immediately lowered their lances, spurred their horses, and like knights of great valor went toward their enemies. And when the count's first rank saw them[56] advance in such a way, they tried not to show that they were dismayed, but spurred their horses against their adversaries very boldly. And when [their] lances met, they hit each other on the shield with all their force. The clash that the lances made was great; you could have seen knights hit the ground and horses stumble, and you could have heard such shouting and clamor that would have kept you from hearing God himself thunder.

What can I say? The Old Knight waited to throw himself into the mix because he wanted to make sure that all the count's troops were involved in the fighting. And when the count saw that the battle had begun, and saw the men of the castle, who were so very few yet charged so boldly, he was greatly amazed, and he ordered those of his rank to attack [their] adversaries so fiercely that not even one may remain on his horse.

23.) And when the count's men received the order from their lord, they did not hesitate but lowered their lances, spurred their horses and threw themselves on their enemies boldly. And when the lances met, they were able to unseat many of those from the castle. They pulverized them so badly – because the castle knights were so few in comparison to the count's men --, that the former could not withstand them but were forced to leave the battlefield. And they were not to blame for that, with such fine chivalry arrayed against them. And when the Old Knight saw that the count and all the count's men had come to

[55] Again Rustichello uses the phrase "bien et sajement" but in this case meaning more "with caution." See also fn. 36 of this Appendix for the use of this expression.
[56] The count's men are seeing the men from the castle.

the battle and that his troops had not could not withstand them, he decided that at that point he could wait no longer. Without further delay he took up his lance and spurred on his horse, going towards where the crowd of adversaries was the thickest. And he hit the first knight that he met so hard that the knight fell to the ground so stunned that he had no need of a doctor. And when he had felled that one, he did not stop there, but chased and struck another, hurling him to the ground with force. What can I say? The knight struck a third, a fourth a fifth, and a sixth, and all with [his] lance, the breast of his horse and his own strength, that he struck down more than twenty knights. And when the Old Knight broke his lance, he took up his sword, which was very big and robust. He placed himself amongst the enemies as boldly as a wolf among sheep, and began to strike enormous blows right and left, peeling off helmets from heads, and shields from necks, and toppling horses and knights to the ground. There was not a blow that he struck that didn't hit a knight; he performed such amazing feats of arms that he astounded his allies and enemies alike.

And when the knights of the castle saw his great strength and the casualties that the Old Knight made of their enemies, each one gained greater force, strength, and courage. They threw themselves on their enemies with great fervor, and an even harsher battle started than the previous one. They were more valorous than before, or at the beginning, and they were able to cause great harm to their enemies. And when the Old Knight, seeing that his knights were all ready to fight and fight well, felt great joy; he did not remain in place, but threw himself in the field striking down and killing horses and knights; he was doing so much that he was feared more than thunder. He did not seem a knight, but thunder and lightning; because know truly that there has never been a knight able to accomplish such feats of arms in a single day as he did. And without a doubt he reduced his enemies to such a state that on the whole battlefield no one dared attack him,

after they understood his mettle, but they [all] fled from him just like animals flee from a lion.

What can I say? You must know that the count's troops could not withstand the great harm being done to them by the Old Knight. And this is no wonder, because the Old Knight, without a doubt, continued to demonstrate in that battle the greatest feat of arms that history has handed down to us; that if Lord Lancelot du Lac, or Lord Tristan, or Lord Palamedes, or fifty of the best Knights of the Round Table found themselves at that moment on the count's side, they would not have been able to withstand the great strength of the Old Knight. In fact, when the count's men could resist no longer, they fled as fast as they could. And the Old Knight and the other knights of the castle, when they saw their enemies defeated, they chased them for more than two leagues, continuing to strike them down and kill them, wreaking great destruction.[57] And when they pursued them for a while, they stopped chasing them, and turned back. They took prisoner the count along with another hundred of their enemies, and conducted them inside the castle.

And returning to the guard tower, the Old Knight and the other knights had their armor taken off. The lady and all the knights of the castle honored the Old Knight as much as if they were honoring a sacred relic. When the Old Knight was disarmed, he ordered that the count and his men be well guarded and sent men to the field where the battle had taken place, to collect all the dead, both the enemies and the allies, and have them buried in holy ground. Everything was done according to his orders, the castle knights went quickly to the count's battlefield, to collect tents, pavilions and equipment of which they found a great deal. What can I say? That night they slept and rested until day. And when the next morning came, and all the knights were up, those who escaped

[57] According to http://www.convert-me.com/en/convert/length/brleague.html, a league is 3 miles, so Branor and the men of the castle of Listinois chased the count's men over 6 miles.

unharmed from the battle – because without a doubt many had been wounded -- the Old Knight had all assembled in the great hall, and after the Old Knight spoke to them in this way:

24.) “Lords,” he said, “God has shown us great grace, for you have in your power the one who has caused you such great harm. For this you should be grateful to our Lord God and to His Mother, and you should not be arrogant and boastful, but instead become more humble and more virtuous. Now that the enemy is completely in your power and you can do with him what you will, I advise you to make peace with him and be good friends and neighbors.” At this he fell silent, and said no more. A very wise knight who was an excellent speaker then came forth, and said: “My lord, you have saved us from the great danger of losing our lives and our lands, and you are the man in the world whom we must respect the most and consider our lord. Now that you have proposed the best solution for us to make peace with this count. I think one could stipulate a very good peace, and I will tell you how: it is true that this count, who is now our prisoner, is of high rank, rich in lands and friends, and has no wife. And the lady of this castle has a daughter who, as you can also see, is wise and well-mannered, and of equally high birth as the count, and who also possesses many lands and castles. For this it would be good if this maiden was given to him as wife, with all her lands and castles, and in this way we can be good friends and have him as our lord; this would be the best solution for him and for us.” At this, the knight fell silent, and said no more.

25.) After this speech many other noblemen agreed that this would be good, and the Old Knight asked the maiden if she too agreed to the proposal that had been given. “Sire,” said the maiden, “you are our lord, and if you are in agreement along with these other knights, then we wish it too.” The Old Knight and all the others said that they did wish it,

and the lady and her daughter gave their consent. At that the Old Knight ordered that the count be brought to him with twelve of the knights who had been taken prisoner with him. Many left [the room], and conducted the count there together with his twelve knights.

And when the count and his knights were in the great hall, and saw that great crowd of people, they were greatly afraid and feared that they would be killed. And when the count was before the Old Knight he very humbly greeted the knight, who returned his greeting, and he made him sit next to him. "Sire count," said the Old Knight, "because of the great offense you have inflicted upon these ladies, our Lord God has brought you to such a point that you risk being killed. So you can see that war and offense are not good, but only horrible things. And because only peace is good, I advise you to make peace with these ladies. And I know that also you do not have a wife, and that this maiden does not have a husband, and both of you are of noble birth. Thus I urge you to marry the maiden who will have as dowry the lands and castles, and to make peace, so you may be good friends. When the count heard the knight speak in such a way he rejoiced at it in his heart for earlier he had greatly feared he would die. Without even consulting his men, he responded to the Old Knight saying to him: "Sire, I will do everything that you charge and command me to do."

So the Old Knight had the lady and her daughter come forward, had a priest summoned, and had a ring put on the maiden's hand; and she was given as wife to Count Guiot,[58] because that was the count's name. The Knight declared the count would receive as dowry from his wife the castles and the lands that he had taken from her, including the castle of Belloe, where they were at that moment. In this way the maiden of Listinois,

[58] West, *Index*, "Guiot," 151. This name is not found in other Arthurian prose and is an invention of Rustichello.

whose name was Aleyne,[59] was given as wife to the count Guiot. When the marriage was celebrated, and the peace stipulated between them, great festivities began in the castle, and all the war and ill-will that had been there before was now transformed into great love and benevolence. This our Lord God can accomplish, He who is full of all mercy. What can I say? The joy and festivities lasted a whole month at the castle, during which time the Old Knight also stayed there, and he was honored by all as if he were a saint. Many times his name was asked and where he was from, but he, to their great displeasure and disappointment, would not say.

26.) When the Old Knight had stayed in that castle more than a month, he decided to return to his country. The next morning he woke up very early, and when he had heard the mass of our Lord, he collected his arms and had his armor put on. And when the lady and her daughter saw that he wanted to leave, they came to him and said: "Sire, we do not know who you are, and this grieves us greatly. But because you prefer to hide your identity from us, we must bear with this fact. Nevertheless, whoever you are, know that we consider you our lord, and all that we can say and do is at your command, for you are without a doubt the man whom we must love best." The Old Knight thanked them, declaring himself their friend and well-wisher. At that point they commended each other to God.

The knight, together with his three squires, got on his horse and went on his way back toward his country. Also the count and all the knights of the castle mounted their horses and accompanied him for all that day. That night they lodged in a castle that belonged to the count, where nothing was wanting. The next day, in the early morning,

[59] See also the West entries for "Aleyne, Aleine, Eleine, Helaine, and Helene," 101 and 157. Unfortunately there are many women in the romance tradition that are given this name and MS fr. 1463 is the only manuscript of the *Compilation* that gives this lady's name. See Cigni, *Il Romanzo,* 382.

they got up, took their horses and started their journey escorted by the count and his knights, and continued on for another eight leagues. And when they had accompanied him as far as you have heard, the count and his knights offered their honor and their service to the Old Knight for as long as he lived. He thanked them warmly, assuring them of his friendship. And they commended each other to God; the count and his men returned to their castle, while the Old Knight with his squires continued his journey, and they went on their way, and rode for many days without having any adventure worthy to be mentioned in the story. They rode until they reached the kingdom of Northumberland.[60]

How the Old Knight defeated Sadoc and twenty knights

27.) And one day when he was riding through a great forest, he encountered a group of knights, which could have been almost twenty. And if anyone asked me who they were, I could say that one of them was called Sadoc, and all the others were his knights. He was one of the cruelest men in this world, and he hated knights errant. And all those he could meet in a forest or some far-off place, and he was successful in defeating, he killed. And undoubtedly it is no great wonder that he hated them, because you must know that the father of this Sadoc, one of the most valiant men in the world, was killed by some knights errant. And when Sadoc saw the knight he was overjoyed, for he saw that he had found him[61] in such a remote place that he could kill him without anyone finding out. Hence he ordered a knight amongst his most valorous to go fight him. And this other knight, who

[60] See fn. 8 of this Appendix 1 for entry on "Northumberland."

[61] The text actually reads found "them" or "qu'il les a truevés," but since there is not reflexive verb to indicate "they found themselves," I have translated "him" because it is Sadoc who is overjoyed to find Branor le Brun or "him" in such a remote place.

did not dare to refuse the order of his lord, without delay spurred his horse and went towards the knight, who was still a little ways off. And when he reached him, without greeting him, he said, “Sire knight, I challenge you, so you must joust.” “Sire knight,” said the Old Knight, “go with God, because I do not want to fight against you nor with any other; because you must know that in fact for many years I have abandoned this custom, and now I am in great haste.” “Sire knight,” said the other, “know that in truth I cannot renounce this fight, because my lord who is over there commanded me to do it.”

28.) “Sire Knight,” said the Old Knight, “if you take orders from someone, let us go to your lord, and we will tell him my situation. I believe he will be wise and courteous enough that, when he knows it, he will let me go away freely.” “Sire, if this is what you want, it is very acceptable for me,” said the other knight. Without further delay, they went immediately to Sadoc. And when the knight was before him, he greeted him with every courtesy, but Sadoc barely acknowledged him. “Sire,” said the Old Knight, “this one wants to fight me, and I have to tell you that when I used to go in search of adventure like other errant knights, I did not refuse jousts. However, you must know that in truth for a long time I have given up arms, and a great necessity forces me down the road that I am on; I beg you will not hold me up for anything, but let me go freely.” And when Sadoc heard the knight speak in such a way, responded with rancor: “Sire knight, defend yourself as best you can, because I tell you that you can avoid neither the joust nor the battle, but you should die or defeat all of us.” When the Old Knight, hearing Sadoc talk in such a way, and seeing that he could not leave without joust and battle, he was very angry. And wrathfully he answered Sadoc: “Vassal, because you will not let me pass without fighting, despite seeing that I am an old man, I tell you in truth there are not enough knights here that I cannot defeat all of you in one single day.” He called one of

his squires, had him give him his shield, lance, and helmet, and prepared for the joust. And when he was ready and lacking nothing, he said to Sadoc and his men: "Vassals, thanks be to God that I am ready to fight against you, and a fight you will have right now." "Vassal," then said Sadoc, "your words are very proud, but I will make you pay dearly for them."

Sadoc ordered the knight, who he had previously commanded to fight [the Old Knight], to go joust against him immediately. At these words, without delay they distanced themselves from each other, lowered their lances and spurred their horses, and rode toward each other very boldly. And when the lances met, they hit each other's shields will all their might; the knight broke his lance, and the Old Knight hit him so hard that he threw him to the ground with a mortal wound. Beating this one, the Old Knight did not stop but went towards the others with lance lowered, telling them that they are all dead men. He hit the first one he met so hard that he brought him to the ground with no further need for a doctor. Then he hit the third and the fourth, throwing them all to the ground.

29.) And when Sadoc and his men saw all this, they all hurled themselves upon the Old Knight, and struck him all at the same time, the front, back and side. But everyone broke his lance on him, without being able to budge him an inch from his saddle.[62] And when the Old Knight had broken his lance, he took his sword in hand, and began to launch great blows right and left. He ripped shields from necks and helmets from heads, sending knight and horses to the ground, he did so much [damage] that he was feared more than thunder. There wasn't a blow landed that didn't bring to the ground a knight with a mortal wound; he did not seem a man, but thunder and lightning. He accomplished such

[62] See fn. 24 of this Appendix, for more on this expression.

marvelous feats of arms that he left Sadoc and his men stunned. And know in truth that out of all of Sadoc's men, only ten of them were left mounted; and when even these had endured so much that they could do no more, but wished for death, they fled on horseback with all the speed they could muster. And when the Old Knight knew that he had defeated them, he didn't follow them, but gave his shield, lance, and helmet to his squire, and recommenced his journey, riding that whole day until it was evening.

Chance brought him near a monastery of nuns, where he stayed the night in comfort; and the monks did all they could to honor and serve him.[63] The next day, early in the morning, he got up, and went to hear the Lord's mass, and then mounted his horse and commended the monks to God. He set out very early with his squires, and rode until noon without meeting with any adventures. And they entered a great forest, where he rode absorbed in his thoughts.

Here is told of the great battle between the Old Knight and the mighty knight Karacados

30.) And when he had ridden awhile in the forest, he heard a lady screaming with great clamor. The knight, as soon as he heard the scream, hastened in that direction. And when he came at the place, he found a very beautiful lady, even though she was no longer young. In her arms she held a freshly wounded knight. And when the lady saw the knight, she told him in pitiful tones: "Oh, noble knight, have pity on a poor desperate lady such as myself!"

The knight, seeing the lady crying so loudly and imploring his pity so wretchedly, felt very sorry for her, and said to her: "My lady, know truly that I will do all that I can to

[63] The phrase is a bit confusing. Initially, in the first clause Rustichello states "mostier de nonain" or a "monastery of nuns" however, in the second clause he states "car li freres"or "the brothers," *Il Romanzo*, 29:9).

ease your suffering." "If you help me, may the Mother of God repay you," said the lady. "My lady," said the Old Knight, "this knight who is wounded, tell me who he is, and why he is wounded thus." "Sire," said she, "I will tell you without delay; you must know that just now we were riding through this forest: this knight, who is my husband, myself, and one of our daughters. At a certain point we met a mighty knight named Karacados,[64] who is certainly the cruelest man in the world. And shortly after he saw my daughter, who is still a maid, he was so enamored that he wanted her for himself. And my lord, who is a fine and valiant knight, told him that he could not have her, and that she was his daughter, and he would defend her against him or against everyone in the world. So they began to fight, and, bad luck would have it, but even more because Karacados is stronger, my husband had the worst of it, as you can see Karacados injured him so badly that he left him for dead. And when he injured him so, he took my daughter away with him, which has made me so heartsick that I do not want to live anymore. And for this reason, noble knight, I pray you take pity and help us, and go after the knight, and fight him. And if chance let you get her back, you will have given us life, and saved us from sorrow. "Lady," said the Old Knight, "how far away can that knight who took your [daughter] have gotten?"[65] "Sire," she answered, "know truly that he cannot be more than half a league away,[66] he went on this road," and she showed him the way.

31.) "Lady," said the knight, "now don't lose heart, but be comforted, because I promise you faithfully that I will do everything in my power to get back your daughter, pray to God that he gives us His grace in this." "And may it please the Mother of God for it to be so," said the lady.

---

[64] See fn. 3 of this Appendix for entry on Karacados.

[65] Missing from text but obviously "our daughter."

[66] Hence Karacados, according to the lady, cannot be more than 1.5 miles away.

At this the knight had his shield and lance given to him, and he prepared everything that he needed, and then he said to his squires to wait there for him until he returned. After he had given these orders, the knight did not delay but started riding in the direction that the lady had indicated. He rode so fast that in less than a league he caught up with the knight who was taking away the maid.[67] He spurred his horse until he had reached them, and he greeted him very courteously. Lord Karacados greeted him politely in turn, for he too was a courteous knight. "Sire," said the Old Knight, "for the sake of the honor of chivalry, I beg you to give me this maid, since I promised as a knight that you would entrust her to me to return her to her mother; I would be truly grateful if you would do this thing; if instead you decide differently, you are acting against chivalry, because you well know, no man can take a maiden who is a virgin, while she is accompanied by her father or her mother. And you also know that this maid is yet a virgin, and that you took her by force from her father and mother." And when Karacados, heard the Old Knight speak this way, he knew that he spoke the truth; but he was a cruel man, and so taken with the maid, that he answered: "Sire, you can say what you please, but I will not give up this maid to you or any other, as long as I can fight for her." "Oh, Sire," said the Old Knight "let it not please you to fight for know that if you do not give her up willingly, I will take her by force of arms." Karacados was very angered by these words, and said to the knight: "Vassal, I don't care about your peace or your war. Since you say you want to take her by force of arms, I tell you that even if there were four [of you]; I still think I could defend her." "You will be put to the test at once," said the Old Knight, "and for this I am sorry, and so help me God." "I do not know how it will finish," said Karacados, "but in my opinion you will be sorry for it before you leave me." "Nor do I

[67] So Karacados was actually 3 miles away from where he kidnapped the maid. See fn. 57 of this Appendix on distance.

know how it will finish," replied the Old Knight, "but you will see in awhile, so prepare yourself, because the moment to joust has arrived."

32.) After these words were said, without further delay, they distanced themselves, lowered their lances and spurred their horses. They came together with great force, for you must know that their horses were very strong and fast, and the knights riding them were valiant and mighty. They came together so quickly that they didn't seem to be knights, but thunder and lightning. And when their lances met, they hit each other on the shield with all their might. Lord Karacados broke his lance, and the Old Knight struck him so hard that he [Karacados] fell to the ground in a most shameful way, and he could no longer finish his charge.

And when Lord Karacados saw himself on the ground, there is no need to ask whether he was angry and enraged; you must know for a fact that he was almost dying from rage, because he was not used to such a thing, that is, to falling. But actually it went well for him, because he wasn't wounded. He got up in a hurry, just like the strong and quick man that he was. And without any hesitation he took up his sword, and advanced boldly on the other knight; and he saw that the Old Knight was already taking the maid away. "Knight!" Karacados exclaimed, "do not take another step with that maid! You thought to win her with just one joust? In truth no, because I will fight for her as long as I can; it's not the first time that an inferior knight defeated a nobleman, so defend yourself however you'd like whether on foot or on horseback: for I challenge you!" And when the Old Knight, saw he could not get away without fighting, he said may God never allow him to fight against a knight on foot, while he himself was mounted. And so he immediately dismounted, gave his horse to the maiden herself, who meanwhile was murmuring prayers to the Mother of God to give the victory of the duel to the knight who

was fighting for her. And when the Old Knight was dismounted, he put his shield forward and his sword in hand, and took up his shield and sword, and he went toward Lord Karacados who was waiting for him. They had at one another very boldly, and traded formidable blows with their sharp swords, giving way to a terrible and harsh skirmish. At that moment on the battlefield could be seen two of the greatest and most valorous and strongest knights in the whole world; you must know that Karacados was so tall and so massive that he was very nearly a giant. And both knights were without a doubt the greatest and strongest knights that you could ever find in the whole world. They traded lethal blows, without sparing their energy, but instead demonstrating that they were mortal enemies. And when they had proven the strength and valor - now of this one and now of that, they greatly admired each other. And Karacados was greatly astounded at it, and told himself that in truth he was the best knight in the world, and the strongest knight he had ever fought since the first day he took up arms, and, "so help me God," said he, "if he wasn't so tall and robust, I would think that he were Lord Lancelot du Lac or Lord Tristan of Leonois; but that is not possible, because I see that he is a full foot taller than either of them. But I can say with certainly that he is as valorous as he is tall." And the Old Knight, on his part, concluded that in truth the other knight was one of the best in the world, and, "one shouldn't be amazed," he thought, "because I can see that he is endowed with the frame of a giant. But whatever the outcome may be, I will fight to the last, because I promised the lady that I would bring her daughter back."

What can I say? The knights' first assault went on, and they had given each other so many blows large and small, that it was a miracle that they were still alive. They both had shattered their shields and split the rings of their mail hauberks. Their armor, was also so badly damaged, that it was almost useless, for you should know the place where the knights were fighting was covered in pieces of shield and chainmail. They went on

giving each other blows, and undoubtedly no other knight in the world would have withstood their duel.

33.) When had been fighting a long time, Karacados was more exhausted than the Old Knight was; he was growing weaker, while his adversary was stronger and tougher than when they had begun. What else can I say? Karacados resisted as long as he could, but in the end it was in vain, because the Old Knight was pulverizing him in such a way, and had fought him for such a long time, that he saw he could go on no more, and had to abandon the battleground. And when the Old [Knight][68] realized this, he attacked him with even greater violence and fury than before; without interruption he rained down blows on Lord Karacados who, overpowered and able only to endure them, covered himself with his shield, and fell back. And when the Old Knight, seeing that his adversary could do no more, he attacked him with such force that he knocked him down to the ground. And right away he beset him, and ripped off his helmet, with the intention of cutting off his head.

And when Lord Karacados, saw that he was reduced to such a state, was very much afraid of dying, and said: "No, noble knight, for pity's sake! Don't kill me, but let me live, and I will give you back the maiden." "Vassal," said the knight, "if you give me back the maiden, I will spare your life. But I want to know who you are, because in you I have found extraordinary strength and power." "Sire," he responded, "my name is Karacados, and I am a knight of low rank, I don't know if you have ever heard talk of me." "Sire Karacados, of you I have already heard talk many times," said the Old Knight. So he commended him to God saying: "Sire, I beg you to pardon me, for fighting you, for

[68] The word {knight} or "chevalier" is missing from the text and is probably an oversight of the scribe. See *Il Romanzo,* 33:3.

you know that I did it against my will." "Sire," then said Karacados, "it is you who must pardon me, because you are right and I was wrong." "I willingly pardon you," said the Old Knight. Karacados asked him: "Sire, I ask you to do me the great favor of telling me your name, and your condition." "Sire," said the knight, "I'll tell you only that you can know neither my name nor my condition, and I hope that this does not displease you." At this they said their goodbyes. The knight got back on his horse, and started his journey again with the maiden, who was very happy and joyful to see her freed from such danger. They rode until they reached the place where the lady and her husband were waiting.

And when the lady and her lord saw their daughter, they did not even wait until she reached them, but went to meet her full of joy. The maiden dismounted from her horse and ran towards her father and to her mother, and they hugged and kissed a hundred times. In all their lives they had never felt such great joy and happiness. Then they knelt in front of the knight's horse and said to him: "Sire, may God protect and defend you above all others: you are in fact the man whom we must love most, because you have taken us out of suffering, and have transformed our unhappiness into joy." The knight did not let them remain there kneeling, but instead had them rise at once, saying to them: "Sire, get up, and tell me: are you too wounded to be able to ride?" "Sire Knight," said he, "know that in truth I am in much pain, but you, by giving me back my daughter, have given me a joy and happiness so great that I no longer feel any pain, and I would be able to ride easily." "Then mount your horse," said the Old Knight, "and let's go to a place where we can have shelter and rest."

34.) Without any hesitation they quickly mounted on their horses, and started their journey together. "Sire," said the Old Knight to the lady's husband, "do you know of some place where we can lodge?" "Sire," said he, "yes, I know one that is near and it is

mine as it is yours, if you like, and we can rest there comfortably." "So let us go there," said the Old Knight, "because it is a good time [to rest]."

They rode in that direction, until they arrived at the knight's lodging-place, where they could dismount. And some serving men took the arms of the Old Knight and the lady's husband, and discovered that he was gravely wounded; they washed and bandaged their wounds with great care, helped by the Old Knight, who was a very good doctor. And when the wounded knight was cared for, the lady had sumptuous garments given to the Old Knight, and all did everything to honor him. Then the tables were set-up and a meal prepared, and they sat down and ate at their leisure. And when they had eaten, the lady had a luxurious bed made for the Old Knight, and she had him brought to his room, where the serving men s put him to bed with much comfort, and they slept until it was day.

And the next day the Old Knight got up very early, took his arms, and commended the lady and the knights to God. And at the moment of his departure, they declared themselves to be in his service along with all their possessions. The Old Knight greatly thanked them. He mounted his horse and started his journey along with his servants, and they rode without any meeting with adventures worthy of being recorded. During the night, the party happened to be near the dwelling of a vavasour, who honored the knight as much as he could, and had his served as best he could, and gave him everything he needed.

How the Old Knight defeated four knights and saved one knight and a lady

35.) And when the next day came, the Old Knight got up, took up his arms, got on his horse and took his leave from the vavasour. And he resumed his journey with his squires, and they rode through a great forest until midday, without meeting with any adventures.

And it was then that they encountered four knights armed from head to toe,[69] who were leading another knight as prisoner, [with] his hands tied in front and [with] his feet [tied] together under his horse; they also had with them leading a very beautiful lady, who was making the greatest lament in the world. And when the lady saw the Old Knight, she begged for his help, saying to him: "Ah noble knight, in the name of God, help this knight who is my lord, whom these evil and disloyal men are leading to his death!" And when the knight, heard the lady say this, and saw her lament, and the other knight led in such an unseemly way, felt great pity on them. Immediately he said to the four knights: "Lords," he said, "why do you carry this knight so basely?" "What business is it of yours how we carry him?" said they. "It's not well done," said the Old Knight, "and I would ask you to free him, and also the lady." "Go your way," they said, "because we will not release them for you or for anyone else in the world, unless he be stronger than us." "Then you will [release the lady and her husband] on my account," said the Old Knight.[70] "What!" said they, "do you think that you are stronger than the four of us?" "Indeed I am," said the Old Knight, "and you all will be put to the test right now."

Then he had his squire give him his shield and a lance, and when he was well armed, he said to them: "Lord knights, either you will release the knight or defend yourselves, because the moment has come for you to joust; pick whatever [weapon] you

[69] See fn. 17 of this Appendix for more on this expression and *Il Romanzo*, 35:3.

[70] Again, this is a somewhat strange sounding expression in English. The "thing" the knights must do for Branor le Brun is to free the lady and her husband or "Donc le laierés voz par moi" (*Il Romanzo,* 35:10)

please." The four knights took him for a madman, seeing as how he was challenging all four of them together. One of them without hesitation said to him: "Vassal, if you are looking for a fight, you have found it!" Without hesitation they moved into position, lowered their lances, spurred their horses, and charged towards one another as fast as their horses would carry them. And when their lances met, they pierced each other's shields. The knight shattered his lance, and the Old Knight hit him so hard that he bore him to the ground so stunned that he didn't know whether it was night or day, and the Old Knight continued to finish the run. And when the three knights saw their companions fall to the ground in such a way: "This knight seems to be very strong; if we attack him one at a time, he will unhorse us all. But if we attack him all three together: we will surely kill him!" They were all in agreement on this, and without delay they lowered their lances, spurred their horses, and went toward the knight.

36.) And when he saw them coming toward him in such a way, he did not hold back, but spurred his horse against them with his lance lowered most boldly. And when the lances met, the three knights shattered theirs against his, and the Old Knight hit one of them so violently, that he unsaddled him. And the remaining two took up their swords, and spurred their horses most boldly toward him. And when he saw them coming with swords in hand, he immediately gave his lance to his squire, took in hand his sword, and bore down impetuously upon them. He pounded the first knight who came into range so hard on the helmet that he felt the sword on his bare flesh, and from the blow he received, could no longer stay in the saddle, and fell from his horse. After that blow, he turned his horse's head towards the other two, who were striking him with their swords from behind. He took one and slammed him to the ground so violently, that he shattered his [adversary's] sword to pieces. He incapacitated all four in such a way that they could no

longer even pretend to defend themselves. And when the Old Knight saw them so reduced, he did them no further injury, but he immediately went to the captive knight, and had his hands and feet unbound. And the knight and his lady were overjoyed to see themselves freed, and greatly thanked the Old Knight. And the Old Knight asked them if they had further need of him: "Yes, we do," they answered, "and we pray you to accompany us to our home, which is not very far from here." "Gladly," said the Old Knight, "let us mount our horses and go, for I will not fail to help you as much as I can." "Many thanks," said they. Then they mounted their horses, and set out on the road, in the same direction that the Old Knight was going.

And when they rode, the Old Knight asked them why the knights had captured them, and where they had been taking him. The knight answered: "My lord, I will tell you at once. Know that two of the four knights that you saw, are blood brothers, and they also had another one. And the three of them killed my father for no reason. At the time I was still unknighted, and I could not attack a knight, so I went, still very young, to King Arthur's court, and I was made a knight long before I was due, so that I could avenge my father's death. And when I was a knight, I immediately killed one of the three brothers. And after that vengeance, I sought to make peace with the other two, and they wouldn't hear of it, but they challenged me to the death. And when I learned this, I tried to protect myself as best I could; they live more than twenty leagues from my home.[71] Today by chance my wife and I were traveling through this forest, to go to her mother's house. And those four knights whom you saw attacked us, and I defended myself as best I could, but it wasn't enough; they took me prisoner in order to lead me to their father, who is still

[71] The men that attacked the knight live roughly 60 miles from his home. See fn. 57 of this Appendix 1 for more on "leagues."

alive, telling me that they would cut off my head in front of him. I have told you the whole of it.

37.) What can I say? Thus talking and riding they reached the home of the knight, where they lodged in comfort, and [the knight and his wife] honored and served the Old Knight as much as they could. The next day, early in the morning, the Old Knight got up, took his arms, and said his goodbyes to the knight and his wife. In the moment of his departure, they said to him: "Sire, we tell you truly that you are the man that we must respect the most in the world and we consider you our lord, because you saved us from such a great danger, and saved our lives. We and all our possessions are at your disposal." The Old Knight thanked them greatly.

Then he started his journey again with his squires, and they rode the whole day without meeting with any adventures worthy of being recorded in a tale, until they reached their lodging, where they were received with every honor. Know that in fact that the lady whom the Old Knight had accompanied to Camelot, [the one who was] so exquisitely dressed that time that he defeated so many knights, was the sister of Lord Segurant le Brun,[72] and she was the niece of the Old Knight. And this same lady received him with every honor, and greatly celebrated his return, and she wanted to know many things about him. In this way, the Old Knight returned to his home, and all that you have heard, happened to him on his return journey there.

[72] See fn. 32 of this Appendix 1 for "Segurant."

Here is told who the Old Knight was and in what way he revealed his name to King Arthur

38.) Now the master wants to tell you who the Old Knight was, what his origins were, and in what way he sent to reveal his name and his condition to the court of King Arthur to recount his condition, and who he is, and his case. Know now that the Old Knight was called Lord Branor le Brun, [73] and he was the uncle of Lord Sigurant le Brun,[74] [for Branor was the brother of Sigurant's father], and cousin to the brave Hector le Brun. In his time he was one of the best knights in the world, and the strongest, and in his times no one in the world who was as great and strong as he was. And he was also the knight [who] lived the longest of all the knights of his generation, and the one who was in the best health until the day of his death. He was of the lineage of Bruns,[75] who as you can learn in many books, was an ancient house to which some of the most valorous and powerful knights in the world belonged. For you should know that Febus,[76] who is such a knight as you all know and as all can attest, was of that lineage. Now I have told you

---

[73] West, *Index*, "Bran(n)or," 48-49.

[74] Branor was the brother of Segurant's father.

[75] West, *Index*, "Brun," 54-55. The etymology of the word "Brun" refers to a "dark" or "brown-haired" man in French. Nonetheless, the pronunciation of Brân in Welsh is very similar [brɑːn] or [bræːn] in French. As a youth Edward was certainly not dark haired but often referred to as "flaxen" or "blonde" haired. In the poem "Song of Peace with England," written during the reign of Edward's father, King Henry III (1264), Edward is*: "Et d'Adouart sa filz qui fi blont sa chaviaus,* / and of Edward his son who has blonde or flaxen hair." Also in the same poem Edward is referred to as being blond yet again. He is*: "Corronier d'Adouart soz sa blonde chaviaus* / to crown Edward on his blonde or flaxen hair" In P. Coss and T. Wright, *Thomas Wright's Political Songs of England: from the Reign of John to that of Edward II* (England: Cambridge University Press, 1996), 64 and 68. On the other hand, Branor le Brun is 120 yrs. old and probably had white hair; and since "flaxen" could be a greyish blonde, perhaps Rustichello, to be kind, called Branor "blonde." Trevet notes that Edward's hair was "light and silvery when he was a boy, turned very dark in manhood (*Juventus)* and then, as he grew older, became white as a swan" (Powicke, *King Henry III* , vol. 2, 686). Since Rustichello probably met or saw Edward when he was in his 30s, he quite possibly already had his dark hair and could be considered "Brun."

[76] See fn. 49 and 77 of this Appendix 1 for entry on "Febus."

who the Old Knight was and who were his ancestors. Now the master will tell you how he sent [word] to the court of King Arthur.

Know that when Lord Branor le Brun returned home, he took a youth, and sent him to the court of King Arthur to recount the words that you are about to hear.[77] The

---

[77] Roger Sherman Loomis is the only scholar to propose an idea for the origins of the Branor le Brun character who had connections with the Celtic god known as Brân the Blessed. Loomis thought that Branor le Brun "belongs to the mighty lineage of those of Brun, of which many books speak; of the lineage was the celebrated 'Phoebus'" or Febus [see R.S. Loomis, *Celtic Myth and Arthurian Romance* (New York: Columbia University Press, 1927), 305-6]. Loomis somewhat misguides his readers when he overly stresses that Brân had solar implications and was a "Celtic sun-god" like Phoebus Apollo (Ibid., 305). However, "Febus" has nothing to do with the sun, but is a character is in the *Guiron le Courtois,* and the *Guiron* is often mistakenly attributed to Rustichello da Pisa.

The *Guiron* was probably written in the 1240s, and the character of Gyron or Guiron was the great-grandson of Febus le Fort. Febus was a descendent of a certain Clodoveus, (see G.D. West, *Prose,* 112), and "left his lands in order to conquer others in remote regions" (Loomis, *Celtic,* 306). In a section of the *Guiron le Courtois*, a character named Brehus (Malory's *Breuse sans Pitié*) is entrapped in a cave by a lady. Here he discovers the giant body of Febus, who has weapons so big that he and they obviously belong to a distant past. Febus clutches a letter describing the destruction he did in one day to the lands of Norgalles (Gwynedd in Wales), Gaules (France), and Norbellande (Northumberland in NE England). Febus states that he dealt out one hundred and fifty blows and slew as many men with every blow he struck to win the lady he loved. The letter states that: "Febus was my name, and it was given me for good cause, for just as Febus gives light to the world, so was I certainly light and splendor of all mortal chivalry so long as I could bear sword" (*Febus ai non et bien me fu cist nons donnés par raison droits: car, tout autresti bien fui ge claret et lumiere de tout mortel chevalerie, tant com ge poi porter espees*) [R.S. Loomis's' English translation in *Celtic Myth,* 306and Alberto Limentani, *Dal roman de Palamedés ai cantari di Febus-el-Forte:Testifrancesi e italiani del due e trecènto* (Bologna: Commissione per i testi di lingua, 1962), 44 for the French translation. After discovering Febus' body and letter, Brehus then goes into another chamber where he finds Febus's wife on a funeral pier. The lady was the daughter of the King of Northumberland and Febus died for love of her. In still another chamber are the tombs of Febus' four sons, and living and unnamed fifth son meets Brehus in yet another chamber and proceeds to have a conversation with him.

This man is also much larger than Brehus, and he marvels at the puny size of present-day knights. This aged knight wants to know of the knights that are living in Brehus' time. Brehus states that the greatest knight in the world is in prison for ten years, and the old man recognizes that Brehus is talking about his grandson, Guiron le Courtois. Afterwards, two old men appear in the cave. One of these men is son of the first old man and the father of Guiron. That is to say, one is the grandfather of Guiron, and the other his father. To prove his superior strength, Gurion's father lifts up a boulder with one hand. Brehus departs after promising not to disclose to anyone but Guiron what and who he has seen in the cavern. Guiron eventually decides to retire with his father and grandfather in the cave. Loomis sees further connections to the Celtic tradition in the names of Febus' sons, but technically there are only two similarities with Branor le Brun. Firstly, both Branor and Febus have the same last name "Le Brun," and secondly, that the men of the Le Brun family are all very large, strong, and have long lifespans. In summary, Rustichello probably found some inspiration from Celtic myth, Febus le Fort, or the *Guiron le* Courtois (which perhaps he wrote according to Claudio Lagomarsini), but nothing has definitively been proven. Moreover no one, with the exception of Loomis, has further attempted to trace the history of Branor le Brun.

youth charged by his lord with this task set out on his way, and rode for many days until he reached Camelot, where he found King Arthur in the great company of knights and lords. The youth went directly before the King, and greeted him very courteously. The King bade him welcome.

39.) ”Sire,” said the youth, “the Old Knight, he who fought you and all your knights that day that he was here with a Lady who was so exquisitely dressed, greets you as his lord, and he begs and implores you to pardon him for jousting against you or your men. He wants you to know in fact that he did not do it out of malice toward you or any man in your court, but rather to learn how strong the knights of this age are, and to know which were the best knights, those of the old generation or the new. And when you begged to know his name, his condition, and his identity, know now that he is Lord Branor le Brun, uncle to Lord Segurant le Brun,[78] the Knight of the Dragon, and cousin to Lord Hector le Brun.”[79]

When my lord King Arthur, Lord Lancelot du Lac, my lord Tristan, Lord Gawain, and all the other lords there present, heard the words that the youth spoke, and realized that the knight was Lord Branor le Brun, they were all astounded because they had thought he had died long ago, nor had they heard anything of him. But since they knew well Lord Segurant, his nephew, they said that in truth Lord Branor le Brun was the most valorous knight in the world, and he still was, even old as he now was. And all the court marveled, and King Arthur said that he wanted his entire story written down. Then he ordered a clerk to add the name of the good knight to the adventures written about the day that he defeated so many kings, lords, and Knights of the Round Table. Now you

[78] See fn. 72 of this Appendix for entry on “Segurant.”
[79] See fn. 48 of this Appendix for entry on “Hector.”

have heard the story of my lord Branor le Brun, that is, of his feats of arms and adventures in the last part of his life. You must know beyond a doubt that after these adventures which you have now heard, he never took up arms again. But on the contrary, according to what the true story tells us in the book of the same my lord Branor, he died in that very year in which he had achieved these feats of arms, and he was buried [in][80] Normandy[81] with every honor, in the richest tomb in the world.

But now the master leave off telling the adventures of Lord Branor le Brun, of whom he will speak no more in this book, and master Rustichello wants to resume the compilation of his book of the extraordinary adventures of every brave knight in the world. And he will tell you above all of the battles and the enmity between Lord Lancelot du Lac and my lord Tristan, the son of King Meliadus of Leonois.

---

[80] Missing from text is the word {in}.

[81] West, *Index,* "Normandie, -mendie," 236-37.

Appendix 2: Summary of Manuscripts with the Branor Episodes (1-39)

BnF, MS fr. 1463. Parchment, late thirteenth century. Contains Rustichello's *Compilation* 1-196 and last adventures/death of Tristan (197-236).[82]

BnF, MS fr. 340. Parchment, early fifteenth century. Contains 1-196, compiled episodes of *Guiron*, long section of *Meliadus*, a section of *Tristan en prose*, a section from *Post-Vulgate Mort Artus*.[83]

BnF, MS fr. 355. Parchment, second half of the fourteenth century. Contains Rustichello's *Compilation* 1-196, and then alternates with *Guiron le Courtois* and *Tristan en prose*. It is similar to MS fr. 340.[84]

Berlin, Staatsbibliothek Preussischer Kulturbesitz, MS Hamilton 581. Parchment, fifteenth century. Contains Rustichello's *Compilation* 1-195.

Geneva, Bibliothèque Bodmeriana, MS 96. Parchment, fifteenth century. Fols. 263a-286b of vol. II contains 1-39.[85]

[82]A digital version of the manuscript is available at: http://gallica.bnf.fr/ark:/12148/btv1b60005205
[83]A digital version of the manuscript is available at: http://gallica.bnf.fr/ark:/12148/btv1b85144236/f2.image.r=rusticien.langEN
[84]A digital version of the manuscript is available at: http://gallica.bnf.fr/ark:/12148/btv1b85144251.r=Rusticien.langEN
[85]A digital version of the manuscript is available at: http://www.e-codices.unifr.ch/en/list/one/fmb/cb-0096-2

Appendix 2 (cont'd): Manuscripts with the Branor Episodes (1-39):

Turin, Biblioteca Nazionale, MS R. 1622. Parchment, fifteenth century. Badly damaged by a fire in 1904. Contains: 2-39, on fols. 350b, 360, 352, 361, 348, 343, 342, 359, 357, 353, 358, 346, 336 of vol. I.19.

BnF, MS fr. 99. Parchment, fifteenth century. Fols. 663d-679a contain 131a-141 and 2-13.9.[86]

Chantilly, Bibliothèque du Château, MSS 645-646-647, Fifteenth century. Contents are identical to BnF, MS f.fr. 99, contains §§131a-141.2; 16.9; 127-19.8; 38-39.

A peripheral manuscript: Viterbo, Archivio di Stato, parchment holdings, box 13, n. 131, end of the thirteenth century to the beginning of the fourteenth century. Two folio fragments belonging to the same Pisa-Genoa group as BnF, MS fr. 1463. These folios seem to transmit Rustichello's episodes 131.21-132.22 (how Lancelot and his knights decided to go to the Joyous Garde to kill Tristan for an affront).[87]

[86]A digital version of the manuscript is available at: http://gallica.bnf.fr/ark:/12148/btv1b52503846r/f2.image.r=99.langEN

[87]Cigni thinks that the oldest and most authoritative stage of the textual tradition is represented by MS fr. 1463 and the Viterbo fragment, also because it is represented by few Franco-Italian witnesses. The texts of two versions composed later in northern Italy (*Tris. Ven*. in Venice, and BNCF, MS Palatino 556 version of *Tav. Rit*., in the area around Cremona) are very faithful to the same redaction (Cigni, "French Redactions," 28).

Appendix 3: Summary of the Contents of BnF MS fr. 1463:

Prologue and Episodes 1-39: Story of Branor le Brun i.e. the Old Knight.

Episodes 40-75: Merlin's Stone, i.e., rivalry and battles between Lancelot and Tristan (later used by Boiardo and Ariosto).

Episodes 76-141: The Knight of the Vermillion Shield (also known as Brunor le Noir)

Episodes 142-147: Perceval aids a lady whose lands have been taken away.

Episodes 145-157: War between the kings of Ireland and Norgales.

Episodes 158-162: Perceval seeks adventure again, fights Sephar, and saves Sagremor.

Episodes 163-196: The submission of Galehaut, adventures of Abés, Lamorat, and Palamedes.

After Episode 196 the tale diverges in the ms. tradition. BnF MS fr. 1463 continues with tales from the *Tristan en prose*, while f.fr. 340 and 355 and Berlin MS Hamilton 581 continue with episodes from the *Guiron Suite* [3rd branch of the *Guiron le Courtois*].[88]

Episodes 197-236: King Marc's battle with King Arthur, adventures of Tristan, and Tristan's death.

[88] There are three branches of *Guiron le Courtois*: 1) *Roman de Meliadus,* dedicated to Tristan's father; 2*) Le Roman de Guiron* on the difficult relationship between Guiron and Dinadan; and 3) *Suite Guiron,* which includes descriptions of individual combats between various knights. For further information and the difficult stemma of the *Guiron le Courtois,* see Nicola Morato, *Il ciclo di "Guiron le Courtois:" Strutture e testi nella tradizione manoscritta*. Firenze: Edizioni del Galluzzo (*Archivio Romanzo*, 2011), 37-71 and 185-209.

Appendix 4: "Elegy on the Death of Edward I"

[MS. Harl. No. 2253, fol. 73, r. of the reign of Edw. II.]

Alle þat beoþ of huerte trewe,

a stounde herkneþ to my song,

of duel þat deþ haþ diht vs newe,

þat makeþ me syke ant sorewe among;

of a knyht þat wes so strong,

of wham God haþ don ys wille;

me þuncheþ þat deþ haþ don vs wrong,

þat he so sone shal ligge stille.

TRANSLATION: All that be of true heart, -- hear my song, --of sadness that death has given us now, --that makes me sigh with sorrow. --Of a knight that was so strong, --of whom God has done his will; --I think that death has done us wrong, --that he so soon should lie still.

Al Englond ahte forte knowe

of wham þat song is þat y synge---

of Edward kyng þat liþ so lowe,

ȝent al þis world is nome con springe.

Trewest mon of alle þinge,

ant in werre war ant wys,

for him we ahte oure honden wrynge,

of Cristendome he ber þe pris.

Appendix 4: "Elegy on the Death of Edward I" (cont'd):

TRANSLATION: All England should know --of whom the song is that I sing; --of Edward the king that lies so low, --through all this world his name emenates. –[The] treuest man of all things, --and in war was wary and wise, --for him we ought to wring our hands, --of Christendom he bore the prize.

Byfore þat oure kyng wes ded,

he spek ase mon þat wes in care.

'Clerkes, knyhtes, barouns,' he sayde,

'y charge ou by oure sware,

þat ȝe to Engelonde be trewe.

Y de ȝe, y ne may lyuen na more;

helpeþ mi sone ant crouneþ him newe,

for he is nest to buen y-core.

TRANSLATION: Before (that) our king was dead, --he spoke as one that was in care, --'Clergy, knights, barons,' he said, –'I charge you by your oath, --that you be true to England. --I die, [and] I may not live any more; --help my son, and crown him now, --for he is next to be chosen.

'Ich biqueþe myn herte aryht,

þat hit be write at mi deuys,

ouer þe see þat hue be diht,

wiþ four-score knyhtes al of pris,

In werre þat buen war ant wys,

aȝeyn þe heþene forte fyhte,

to wynne þe croi þat lowe lys;

myself ycholde ȝef þat y myhte.'

Appendix 4: "Elegy on the Death of Edward I" (cont'd):

TRANSLATION: 'I rightly bequeath my heart, --that it be written at my devise, --that it be sent over the sea, --with fourscore knights all of repute, --in war that are wary and wise, --against the heathen go forth to fight, --to win the cross which lies low; -- I would [go] myself if I could.'

Kyng of Fraunce, þou heuedest sunne,

þat þou þe counsail woldest fonde,

to latte þe wille of kyng Edward

to wende to þe Holy Londe;

þat oure kyng hede take on honde

al Engelond to ȝeme ant wysse,

to wenden in-to þe Holy Londe,

to wynnen us heve[n] riche blisse.

TRANSLATION: King of France, you have sinned, --that you should seek counsel,-- to hinder the will of King Edward --to go to the Holy Land: --that our king had taken in hand –all England to rule and teach –to go into the Holy Land, --to win us heaven's bliss.

þe messager to þe Pope com,

And seyde þat oure kyng wes ded;

ys oune hond þe lettre he nom,

y-wis is herte wes ful gret.

þe pope him-self þe lettre redde,

ant spec a word of gret honour---

'Alas!' he seide, 'is Edward ded?

Of Cristendome he ber þe flour!'

Appendix 4: "Elegy on the Death of Edward I" (cont'd):

TRANSLATION: The messenger came to the pope, --and said that our king was dead: --he took the letter [into] his own hand, --his heart was very full: --the pope himself read the letter, --and spoke a word of great honor, --'Alas!' he said, 'is Edward dead? –he bore the flower of Christendom!'

þe Pope to is chaumbre wende,

for del ne mihte he speke na more;

ant after cardinals he sende,

þat muche couþen of Cristes lore,

boþe þe lasse ant eke þe more,

bed hem boþe rede ant synge;

gret deol me myhte se þore,

mony mon is honde wrynge.

TRANSLATION: The Pope went to his chamber,-- because of [his] grief he could speak no more; --and after he sent [for] the cardinals, --who knew much of Christ's doctrine, --both the lesser and also the greater [doctrines],-- he bade them [to] both read and sing; --great grief could be seen there, --many a man wrung his hands.

þe Pope of Peyters stod at is masse,

wiþ ful gret solempnete;

þer me con þe soule blesse:

'Kyng Edward, honoured þou be!

God lene þi sone come after þe

bringe to ende þat þou hast bygonne;

þe holy crois y-mad of tre,

so fain þou woldest hit han y-wonne.

Appendix 4: "Elegy on the Death of Edward I" (cont'd):

TRANSLATION: The Pope of Poitiers held his mass, --with very great solemnity,-- there they began to bless the soul: --"King Edward, you are honored! --God give your son, who follows you, -- [that he] bring an end to what you have begun; --the holy cross made of wood, --so happy you would have been had you won [it].

'Ierusalem, þou hast i-lore

<u>þe flour of al chiualerie;</u>

Nou Kyng Edward liueþ na more,

Alas! þat he ȝet shulde deye!

He wolde ha rered vp fol heyȝe

oure baners, þat bueþ broht to grounde;

wel longe we mowe clepe and crie

er we a such kyng han y-founde!'

TRANSLATION: 'Jerusalem, you have lost --the flower of all chivalry; --now King Edward no longer lives: --Alas! that he should die!-- He would have raised up very high --our banners that are [now] dragging on the ground; --we may call out and cry [for a] very long [time]-- before we find such a king!'

Nou is Edward of Carnaruan

King of Engelond al aplyht,

God lete him ner be worse man

þen is fader, ne lasse of myht

to holden is pore men to ryht,

ant vnderstonde good consail,

al Engeland forte wisse ant diht,

of gode knyhtes darh him nout fail.

TRANSLATION: Now Edward of Caernarvon is--entirely King of England,-- God let him never be [a] worse man --than his father [was], nor [let him be] less of stength --to keep his commoners in-line, --and to understand good counsel, --[he has] all [of] England to direct and manage; --good knights do not fail him.

Appendix 4: "Elegy on the Death of Edward I" (cont'd):

þah mi tonge were mad of stel,

ant min herte yȝote of bras,

þe godnesse myht y neuer telle

þat wiþ Kyng Edward was.

Kyng, as þou art cleped conquerour,

in vch bataille þou hadest pris;

God bringe þi soule to þe honour

þat euer wes ant euer ys,

þat lesteþ ay wiþouten ende!

bidde we God ant oure Ledy,

to þilke blisse Jesus us sende. Amen.

TRANSLATION: Though my tongue were made of steel, --and my heart out of brass, --I could never tell the goodness ----that was King Edward:--King, as you are called conqueror, --in every battle you won the prize; --God bring your soul to the honor --which ever was and ever is, --which lasts ever without end!—Let us pray to God and our Lady, --to that bliss [that] Jesus sends us! Amen.

Appendix 5: “Lament on the Death of Edward I”

[MS. Bibl. Publ. Cantab. Gg. I. 1, fol. 489, of the reign of Edw. II.]

Seigniurs, oiez, pur Dieu le grant,

Chançonete de dure pité,

De la mort un rei vaillaunt ;

Homme fu de grant bounté,

E que par sa leauté

Mut grant encuntre ad sustenue;

Ceste chose est bien prové;

De sa terre n'ad rien perdue.

Priom Dieu en devocioun

Que de ses pecchez le face pardoun.

TRANSLATION: --Lords, listen, as God is great, --to a little song of great sorrow, --for the death of a valiant king; --a man he was of great goodness,--and who by his loyalty --has sustained many a great encounter; --this thing is proved well; --of his land he lost none. --Let us pray [to] God with devotion –[that God] pardons him for his sins.

De Engletere il fu sire,

E rey qe mut savoit de guere;

En nule livre puet home lire

De rei qe mieuz sustint sa tere.

Toutes les choses qu'il vodreit fere,

Sagement les tinst à fine.

TRANSLATION: Of England he was lord, --and a king who knew much of war;-- in no book can one read --of a king who sustained his country better.—Everything that he wanted to do, --wisely he accomplished them.

Appendix 5: "Lament on the Death of Edward I" (con'd)

Ore si gist soun cors en tere:

Si va le siecle en decline.

Le rei de Fraunce grant pecché fist,

Le passage à desturber

Qe rei Edward pur Dieu emprist,

Sur Sarazins 1'ewe passer.

TRANSLATION: Now his body lies in earth; --and the world goes into decline. The King of France greatly sinned, --to hinder the way--which King Edward undertook for God's sake, --to cross the water against the Saracens.

Sun tresour fust outre la mere,

E ordine sa purveaunce

Seint eglise pur sustenire:

Ore est la tere en desperaunce.

Jerusalem, tu as perdu

La flour de ta chivalerie,

Rey Edward le viel chanu,

Qe tant ama ta seignurie.

TRANSLATION: His treasure was beyond the sea, and his purveyance to sustain Holy church: --now the land is in despair. Jerusalem, you have lost --the flower of your chivalry,-- King Edward the old and hoary, --who loved your lordship much.

Appendix 5: “Lament on the Death of Edward I” (con’d)

Ore est-il mort; jeo ne sai mie

Toun baner qi le meintindra:

Sun duz quor par grant druerie

Outre la mere vous mandera.

TRANSLATION: Now he is dead; I hardly know [who] will keep your banner [flying]: he will send his gentle heart over the sea as a token of his great love [for you].

Un jour avant que mort li prist

Od son barnage voleit parler;

Les chivalers devant li vist,

Durement commenca de plurer.

"Jeo murrai/' dist, "par estover,

Jeo vei ma mort que me vent quere;

Fetes mon fiz rey corouner,

Qe Dampnt-Dieu li don bien fere!"

TRANSLATION: One day before death took him, he wanted to speak to his baronage; he saw the knights before him, grievously he began to cry bitterly. "I shall die," said he, "I see [that] my death seeks me out; crown my son king, may the Lord God let him do what is right!"

Appendix 5: “Lament on the Death of Edward I” (con’d)

A Peiters a Papostoile

Une messager la mort li dist ;

E la Pape vesti 1'estole,

A dure lermes les lettres prist.

‘Alas’ ceo dist, ‘comment?’ Morist

A qi Dieu donna tant honur?

A l’alme en face Dieu mercist!

De seint eglise il fu la flour."

TRANSLATION: At Poitiers a messenger told the pope of his death; and the pope put on his stole, with bitter tears he took the letters. ‘Alas!’ he said, ’how?’ is he dead --to whom God gave so much honor? --May God have mercy to his soul! --he was the flower of [the] holy church."

L'apostoile en sa chambre entra,

A pein le poeit sustenir;

E les cardinals trestuz manda,

Durement commenca de plurir.

Les cardinals li funt teisir.

En haut commencent lur servise :

Parmy la citè funt sonir,

Et servir Dieu en seint eglise.

TRANSLATION: The pope entered his chamber, --he could hardly endure it; --and he sent for all the cardinals, --grievously he began to weep. --The cardinals made him desist, --they began their service aloud; --they had the bells rung through the city, --and God's service held in the Holy church.

Appendix 5: “Lament on the Death of Edward I” (con’d)

L'apostoile meimes vint à la messe,

Ove mult grant sollenlpnité ;

L'alme pur soudre sovent se dresse,

E dist par grant humilite:

‘Place à Dieu en Trinité,

Qe vostre fiz en pust conquere

Jerusalem la digne cité,

E passer en la seinte tere!’

Le jeofne Edward d'Engletere

Rey est enoint e corouné :

Dieu le doint teil conseil trere,

Ki le pais seit gouverné;

TRANSLATION: The pope himself came to the mass, --with very great solemnity; --he often pleads to absolve his soul, --and said in great humility:-- ‘May it please God in Trinity,-- that your son may effect the conquest-- of Jerusalem the noble city,-- and go into the Holy Land!’ The young Edward of England-- is anointed and crowned king:-- may God grant that he follows such counsel,--that the country may be governed ;

E la coroune si garder,

Qe la tere seit entere,

E lui crestre en bounté,

Car prodhome i fust son pere.

TRANSLATION: And so to preserve the crown, --that the kingdom may be [held] intact, and increase in bounty for him, --for his father was a worthy man.

Appendix 5: “Lament on the Death of Edward I” (con’d)

Si Aristotle fuste en vie,

E Virgile qe savoit 1'art,

Les valurs ne dirr[ai]ent mie

Del prodhome la disme part.

Ore est mort le rei Edward,

Pur qui mon quor est en trafoun;

L'alme Dieu la salve garde,

Pur sa seintime passioun! Amen.

TRANSLATION: If Aristotle and Virgil,-- who [were] educated men, were alive, --they would be incapable of describing even a tenth part of the value –of [this] worthy man. – Now King Edward, --for whom my heart is in desolation, is dead; --may God save and keep his soul, --for the sake of His most
Holy passion! Amen.

BIBLIOGRAPHY

Abulafia, David and John A. Davis, eds. *Italy in the Central Middle Ages.* Oxford: Oxford University Press, 1994.

Algirdas Julien Greimas. *Dictionnaire de l'ancien Français.* Paris: Larousse, 2001.

Airaldi, Gabriella. “Chiesa e commune nelle istituzioni genovesi alla fine del duecento.” In *Atti della Società Ligure di storia patria* vol. 2, pt. 2, 111-121. Genova: La Società Ligure di storia patria, 1984.

Allaire, Gloria. "Arthurian Art in Italy." In *The Arthur of the Italians: The Arthurian Legend in Medieval Italian Literature and Culture,* edited by Gloria Allaire and F. Regina Psaki, 205-233. Cardiff: University of Wales Press, 2014.

Allaire, Gloria. "Owners and Readers of Arthurian Books in Italy." In *The Arthur of the Italians: The Arthurian Legend in Medieval Italian Literature and Culture,* edited by Gloria Allaire and F. Regina Psaki, 190-204. Cardiff: University of Wales Press, 2014.

Allaire, Gloria, comp. *Italian Literature. Il Tristano Panciatichiano*. Edited by F. Regina Psaki. New York: D.S. Brewer, 2002.

Allan, Hope Emily. “Mystical Lyrics, of the *Manuel des Pechiez.” Romantic Review* 9, (1918): 154-193.

Alexandre, Arnaud. "Les hotels princiers." In *Paris et Charles V, arts et architecture,* edited by F. Pleybert, 132-37. Paris: Action Artistique de la Ville de Paris, 2001.

Alexandre-Bidon, Danièle. “Vrais ou faux? L’apport de l’iconographie à l’étude des châteaux médiévaux." In *Le château médiéval, forteresse habitée (XIe – XVIe s.), archéologie et histoire: perspectives de la recherché en Rhône-Alpes. Actes du colloque de Lyon (Avril 1988),* edited by J.M. Poisson, 43-55. Paris: Éditions de la Maison des Sciences de l'Homme, 1992.

Allmand, Christopher. *The De Re Militari of Vegetius: The Reception, Transmission and Legacy of a Roman Text in the Middle Ages*. Cambridge, UK: Cambridge University Press, 2011.

Amitai, Reuven. “Edward of England and Abagha Ilkhan. A Reexamination of a Failed Attempt at Mongol-Frankish Cooperation.” In *Tolerance and Intolerance. Social Conflict in the Age of the Crusades,* edited by Michael Gervers and James M. Powell, 75-82. New York: Syracuse Press, 2001.

Apter, Ronnie. *A Bilingual Edition of the Love Songs of Bernart de Ventadorn in Occitan and English: Sugar and Salt.* Lewiston, NY: Edwin Mellen Press, 1999.

Ariosto, Lodovico. *Orlando Furioso,* edited by Marcello Turchi. Milano: Garzanti, 1974.

Ashtor, Eliyahu. “Il retroscena economico dell’urto genovese-pisano alla fine del

duecento." In *Atti della Società Ligure di storia patria,* vol. 2, pt. 2, 51-83. Genova: La Società Ligure di storia patria, 1984.

Aspin, Isabel Stewart Tod. *Anglo-Norman Political Songs*. Oxford: Published for the Anglo-Norman Text Society by B. Blackwell, 1953.

Atiya, Aziz S. *Crusade, Commerce and Culture.* Bloomington: Indiana University Press, 1962.

Aubrun, Michel, Pierre Charbonnier, and Gabriel Fournier. "Le Moyen Âge dans les paysages ruraux auvergnats." In *Actes des congrès de la Société des historiens médiévistes de l'enseignement supérieur public, 10e congrès in Lille,* 221-232. Paris: Publication of the Sorbonne, 1979.

Aurell, Michael. "The Western Nobility in the Late Middle Ages: A Survey of the Historiography and Some Prospects for New Research." In *Nobles and Nobility in Medieval Europe. Concepts, Origins, Transformations,* edited by Anne J. Duggan, 263-73. Woodbridge, Suffolk: The Boydell Press, 2000.

Avril François Marie-Thérèse Gousset, and Claudia Rabel. *Les manuscrits enluminés d'origine Italienne* (XIIIe siècle), Tome II, Paris: Bibliothèque Nationale, 1984.

Avril, François. "Un cas d'influence italienne dans l'enluminure du Nord de la France au quatorzième siècle." In *Studies in Late Medieval and Renaissance Painting in Honor of Millard Meiss,* edited by I. Lavin and J. Plummer, 32-42. New York: New York University Press, 1977.

Avril, François. "Trois manuscrits Napolitains des collections de Charles V et de Jean de

Berry." In *Bibliothèque de l'École des Chartes* 27, no. 2, 291-328. Paris and Geneve: Librairie Droz, 1969.

Ayloffe, Joseph. *An Account of the Body of King Edward the First, as it Appeared on Opening His Tomb in the Year 1774. By Sir Joseph Ayloffe*. Read at the Society of Antiquaries, May 12, 1774. [London], 1775. Eighteenth Century Collections Online. Gale. University of Texas at Austin. Accessed Feb. 18th, 2016. FASCIMILE.

Baker, M. J. "France's First Sentimental Novel and Novels of Chivalry." *Bibliothèque d'Humanisme et Renaissance* 36 (1974): 33-45.

Balan, Pietro. *Storia d'Italia di Pietro Balan. Aumentata e corretta dall'autore*. Vol. 4. Edited by Rodolfo Maiocchi and Ferdinando Rodolfi. Modena: Tipografia Pontificia ed Arcivescovile dell'Immacolata Concezione, 1894.

Balouzat, Christelle. "Actes des comtes dauphins d'Auvergne (fin XIIe – fin XIIIe siècle)." Mémoire de Maîtrise, Université Blaise Pascal (U.F.R.), Lettres et Sciences Humaines, Clermont-Ferrand, 1998.

Banti, Ottavio. "I trattati fra Genova e Pisa dopo la Meloria fino alla metà del secolo XIV. In *Atti della Società Ligure di storia patria* vol. 2, pt. 2, 349-364. Genova: La Società Ligure di storia patria, 1984.

Barber, Richard W., and Juliet R. V. Barker. *Tournaments: Jousts, Chivalry, and*

Pageants in the Middle Ages. New York: Weidenfeld & Nicolson, 1989.

Battaglia Ricci, Lucia, and Fabrizio Cigni. "Breve profilo della cultura a Pisa tra XII e XIII secolo." In *Cimabue a Pisa: La pittura pisana del duecento da Giunta a Giotto*, edited by Mariagiulia Burresi and Antonino Caleca, 43-50. Pisa: Pacini, 2005.

Baumgartner, Emmanuèle. "Luce de Gast et Hélie de Boron, le chevalier et l'écriture." *Romania* 106 (1985): 326-340.

Baumgartner, Emmanuèle. *Le Tristan en prose: essai d'interprétation d'un roman médiéval*. Geneva: Droz, 1975.

Beaton, Roderick. *The Medieval Greek Romance.* Cambridge: Cambridge University Press, 1989.

Beigbeder, Olivier. "Fresques et peintures murales en Auvergne et Velay." In *Collection le Bibliphile en Auvergne*, t. 15. Clermont-Ferrand: G. de Bussac, 1970.

Bellonci, Maria. Introduction in *Marco Polo*, 1-8. Paris: Mengès, 1982.

Benedetto, Luigi Foscolo. *La tradizione manoscritta del "Milione" di Marco Polo*. Torino: Bottega d'Erasmo, 1962.

Benedetto, Luigi Foscolo. "Non Rusticiano ma Rustichello." In *Uomini e tempi:pagine varie di critica e storia*,63-70. Milano: Ricciardi, 1953.

Benedetti, Roberto. “Qua fa’ un santo e un cavaliere… aspetti codicologici e note per il miniature.” In *La grant queste del Saint Graal (la grande ricerca del Santo Graal). Versione inedita della fine del XIII secolo del ms. Udine, 177*, edited by Aldo Rossellini, 31-47. Udine: Treicesio, 1990.

Benedictow, Ole Jørgen. *The Black Death, 1346-1353: The Complete History*. Woodbridge, Suffolk, UK: Boydell, 2004.

Bertolucci Pizzorusso, Valeria. “Enunciazione e produzione del testo nel *Milione.” Studi Mediolatini e Volgari*, 25, (1977): 5-43.

Béroul. *The Romance of Tristan; And, the Tale of Tristan's Madness*, Translated by Alan S. Fedrick. Harmondsworth: Penguin, 1970.

Biddle, Martin. *King Arthur's Round Table: An Archaeological Investigation.* Woodbridge, England: Boydell and Brewer, 2000.

Binski, Paul. *Westminster Abbey and the Plantagenet: Kingship and the Representation of Power, 1200-1400.* New Haven: Yale University Press, 1995.

Bogdanow, Fanni and Richard Trachsler. “Rewriting Prose Romance: The Post-Vulgate Roman du Graal and Related Texts.” In T*he Arthur of the French: The Arthurian Legend in Medieval French and Occitan Literature,* edited by Gly S. Burgess and Karen Pratt, 342-92. Cardiff: University of Wales, 2006.

Boiardo, Matteo Maria. *Orlando Innamorato*. Translated by Charles Stanley Ross. Edited by Anne Finnigan. Berkeley: University of California Press, 1989.

Bonner, Anthony, ed. and trans. *Songs of the Troubadours.* New York: Schocken, 1972.

Borchardt, Rudolf. *Pisa, solitudine di un impero*. Trans. Marianello Marianelli. Pisa: Nistri-Lischi, 1965.

Borroff, Marie. *Sir Gawain and the Green Knight: An Authoritative Translation, Contexts, Criticism*, edited by Laura L. Howes. New York: W.W. Norton, 2010.

Boudet, Marcellin and Roger Grand. *Etude historique sur les epidemies de peste en Haute-Auvergne.* Whitefish, MT: Kessinger Publishing, 1902.

Branca, Vittore, ed. *Dalle origini al secolo di Marco Polo*. Firenze: Sansoni, 1979.

Breillat, Pierre. “La Table Ronde en Orient: Le poème grec du Vieux Chevalier." *Mélanges d’archéologie et d’histoire* 55 (1938): 308-340.

Browning, Oscar. *Guelphs & Ghibellines; A Short History of Mediaeval Italy from 1250-1409*. London: Methuen, 1893.

Brownlee, Marina. "The Politics of an Arthurian Prequel: Rustichello, Palamedes, and

Byzantium." In *La pluma es lengua del alma': Ensayos en Honor de E. Michael Gerli*, edited by José Manuel Hidalgo, 53-77. Newark, DE: Juan de la Cuesta, 2011.

Bruce, James Douglas. *The Evolution of Arthurian Romance*. Göttingen: Vandenhoeck & Ruprecht, 1923.

Bubenicek, Venceslas, ed. *Guiron le Courtois: roman arthurien en prose du XIIIe siècle.* Berlin: De Gruyter, 2015.

Busby, Keith. *Codex and Context: Reading Old French Verse Narrative in Manuscript*, vol. II. Amsterdam: Rodopi, 2002.

Busby, Keith, ed. *Word and Image in Arthurian Literature*. New York and London: Garland Publishing, Inc., 1996.

Calin, William. *The French Tradition and the Literature of Medieval England.* Toronto: University of Toronto, 1994.

Campbell, Mary B. *The Witness and the Other World: Exotic European Travel Writing, 400-1600.* Ithaca and London: Cornell University Press, 1991.

Carbonaro, Giovanna. “Il cronòtopo del "Vecchio Cavaliere" (Ιππότης ο πρεσβύτης).” In *Forme del tempo e del cronotopo nelle letterature romanze e orientali,X Convegno Società Italiana di Filologia Romanza, VIII Colloquio Internazionale, Roma, 25-29 settembre 2012,* 363-373. Soveria Mannelli [Catanzaro]: Rubbettino, 2014.

Carrai, Stefano. “Aspetti della letteratura Toscana nei secoli XIII e XIV.” In *Etruria, Tuscia, Toscana. L’identità di una regione attraverso i secoli, II (secoli V-XIV). Atti della seconda Tavola Rotonda (Pisa, 18-19 marzo 1994),* edited by G. Garzella, 134-40. Pisa: Pacini, 1998.

Caruso, Sergio. “Montapertismo, malattia toscana, rivalità secolari condite da sfottò.”*Corriere Fiorentino,* Aug. 31, 2008, http://corrierefiorentino.corriere.it/politica/articoli/2008/08_Agosto/29/battaglia_montaperti_toscana.html

Casula, Francesco Cesare. *La storia di Sardegna*. Sassari: Carlo Delfino Editore, 1994.

Ceccarelli Lemut, “Maria Luisa. “Della Gherardesca, Bonifazio.” In *Dizionario Biografico degli Italiani,* vol. 37 (1989), http://www.treccani.it/enciclopedia/bonifazio-della-gherardesca_(Dizionario-Biografico)/

Ceccarelli Lemut, Maria Luisa. *Il conte Ugolino Della Gherardesca*: *un episodio della storia di Pisa alla fine del Duecento,* discussion given in Pisa, August 6th, 1982, for the Associazione degli Amici di Pisa. In *Dizionario Biografico degli Italiani,* vol. 37 (1989), 6-18. http://www.treccani.it/enciclopedia/ugolino-della-gherardesca_%28Dizionario-Biografico%29/

Ceccarelli Lemut, Maria Luisa. “I Pisani prigionieri a Genova dopo la battaglia della

Meloria: La tradizione cronistica e le fonti documentarie." In *1284 L'anno della Meloria,* edited by Renzo Mazzanti, Marinella Pasquinucci, and Ursula Salghetti Drioli, 77-88. Pisa: ETS editrice, 1984.

Charbonnier, Pierre. *Une autre France: La seigneurie rurale en Basse Auvergne du XIVe au XVIe siècle*, vol. I. Clermont-Ferrand: Inst. d'Études du Massif Central, 1980.

Chaytor, H. J. *From Script to Print; an Introduction to Medieval Vernacular Literature*. Cambridge: W. Heffer, 1950.

Chênerie, Marie-Luce. *Le chevalier errant dans les romans arthuriens en vers des XII et XIII siècles.* Geneve: Librairie Droz, 1986.

Ciccaglioni, Giovanni. "Dal comune alla signoria? Lo spazio politico di Pisa nella prima metà del XIV secolo." *Bullettino dell'Istituto storico per il medio evo*, 109 no.1 (2007): 235-69.

Cigni, Fabrizio. "French Redactions Italy: Rustichello da Pisa." In *The Arthur of the Italians: The Arthurian Legend in Medieval Italian Literature and Culture*, edited by Gloria Alliare and F. Regina Psaki, 21-40. Cardiff: University of Wales, 2014.

Cigni, Fabrizio. "Manuscrits en Français, Italien, et Latin entre la Toscane et la Ligurie à la fin du XIII siècle: Implications codicologiques, linguistiques, et évolution des genres narratifs." In *Medieval Multilingualism: The Francophone World and its Neighbours*, edited by Christopher Kleinhenz and Keith Busby, 187-217. Turnhout, Belgium: Brepols, 2010.

Cigni, Fabrizio. “Copisti prigionieri (Genova, fine sec. XIII).” In *Studi di filologia romanza offerti a Valeria Bertolucci Pizzorusso,* edited by Pietro G. Beltrami, Maria Grazia Capusso, Fabrizio Cigni, Sergio Vatteroni, 429-439, t. I. Pisa: Pacini, 2006.

Cigni, Fabrizio. “La ricezione medievale della letteratura Francese nella Toscana nord-Occidentale.” In *Fra toscanità e italianità. Lingua e letteratura dagli inizi al Novecento. Atti dell’Incontro di Studio Halle-Wittenberg, Martin Luther Universitat, Institut fur Romanistik, May 1996,* edited by E. Werner and S. Schwarze, 71-108. Tubingen-Basel: Francke, 2000.

Cigni, Fabrizio. "Roman de Tristan in Prosa e 'Compilazione' di Rustichello da Pisa in area veneta. A proposito di una recente edizione," edited by Vittore Branca and Carlo Ossola. In *Lettere Italiane* 1(1995): 598-622.

Cigni, Fabrizio. "Pour l'edition de la *Compilation* de Rustichello da Pisa: la version du MS Paris, B.N., FR. 1463.1." *Neophilologus* 76, no. 4 (1992): 519-534.

Cockerill, Sara. *Eleanor of Castile: The Shadow Queen*. Gloucestershire: Amberley, 2014.

Clanchy, Michael T. *From Memory to Written Record: England 1066-1307*. 2nd edition. London: Wiley, 1996.

Classen, Albrecht. “Images of Adventure: Ywain in the Visual Arts” [Review]. *The Medieval Review* 11, no. 18 (1996). Accessed online at: https://scholarworks.iu.edu/journals/index.php/tmr/article/view/14438/20556.

Coleman, Joyce. *Public Reading and the Reading Public in Late Medieval England and France.* Cambridge: Cambridge University Press, 2005.

Cohen, Jeffrey Jerome. *Of Giants: Sex, Monsters, and the Middle Ages*. Minneapolis: University of Minnesota Press, 1999.

Conte, Silvia, ed. *I viaggi del Milione: itinerari testuali, vettori di trasmissione e metamorfosi del Devisement du Monde di Marco Polo e Rustichello da Pisa nella pluralità delle attestazioni*. Roma: Tiellemedia, 2008.

Cornish, Alison. *Vernacular Translation in Dante's Italy: Illiterate Literature*. Cambridge: Cambridge University Press, 2011.

Coss, Peter, ed., and Thomas Wright, trans. *The Political Songs of England from the Reign of John to That of Edward II.* Cambridge: Cambridge University Press, 1996.

Courthope, William John. *The Connexion between Ancient and Modern Romance*. London: Published for the British Academy by H. Frowde, Oxford University Press, 1911.

Courtillé, Anne. *Histoire de la peinture murale dans l'Auvergne du Moyen-Âge.* Brioude: Watel, 1983.

Courtillé, Anne. "La peinture murale en Auvergne au temps de Jean de Berry." In *Le*

palais et son décor au temps de Jean de Berry, edited by Alain Salmagne, 195-209, pt. 4. Tours: Presses Universitaires François-Rabelais, 2010.

Critchley, J. S. *Marco Polo's Book*. Aldershot, Hampshire, Great Britain: Variorum, 1992.

Cristiani, Emilio. *Nobiltà e popolo nel comune di Pisa dalle origini del podestariato alla signoria dei Donoratico*. Napoli: Istituto italiano per gli studi storici, 1962.

Cristiani, Emilio. "Gli avvenimenti pisani del periodo ugoliniano in una cronaca inedita." *Bollettino Storico Pisano* XXVI-XXVII, (1957-1958): 3-104.

Curtis, Renée L. "Who Wrote the Prose Tristan? A New Look at an Old Problem." *Neophilologus* 67 (January 1983): 35-41.

Curtis, Renée L. "The Problems of the Authorship of the Prose Tristan." *Romania* LXXIX (1958): 314-38.

Cuttino, G.P. *English Medieval Diplomacy*. Bloomington: Indiana University Press, 1985.

Da Pisa, Rustichello. Translated and compiled by Fabrizio Cigni. *Il romanzo arturiano di Rustichello da Pisa*. Pisa: Cassa di Risparmio di Pisa, 1994.

De Adam, Salimbene. *The Chronicle of Salimbene de Adam*, eds., Joseph L. Baird, Giuseppe Baglivi, and John Robert Kane. Binghamton, NY: Center of Medieval & Early Renaissance Texts & Studies, 1986.

D'Amiens, Girart. Richard Trachsler ed. *Escanor: roman arthurien en vers de la fin du XIIIe siècle*. Genève: Libraire Droz, 1994.

Dauvergne, Anatole. "Note sur le château de Saint-Floret." In *Mémoires lus à la Sorbonne, Archéologie,* 67-81. Paris: Publication of the Sorbonne, 1863.

Davies, R.R. *The Age of Conquest: Wales, 1063–1415.* USA: Oxford University Press, 2000.

Degenhart, Bernhard and Annegrit Schimitt. "*Frühe angiovinsche buchkunst in Neapel. Die illustrierung französischer uterhaltungsprosa in neapolitanischen scriptorien zwischen 1290 und 1320,*" edited by Friedrich Piel and Jörg Traeger, 71-92. Tübingen: Frestschrift Wolfgang Braunfels, 1977.

Deighton, Alan. "The Tristan Illustrations in MS London, BL Add 11619, the Roman de Tristan en Prose and the German Tristan Tapestries." *Tristania* 18 (1998): 17-35.

Delcorno Branca, Daniela. "The Italian Contribution: La Tavola Ritonda." In *The Arthur of the Italians: The Arthurian Legend in Medieval Italian Literature and Culture,* edited by Gloria Allaire and F. Regina Psaki, 69-87. Cardiff: University of Wales, 2014.

Delcorno Branca, Daniela. *Tristano e Lancillotto in Italia: Studi di letteratura arturiana*. Ravenna: Longo, 1998.

Delcorno Branca, Daniela. "Per la storia del 'Roman de Tristan' in Italia." *CN (Cultura*

Neolatina) 40 (1980): 211-29.

Delcorno Branca, Daniela. *Il Romanzo Cavalleresco Medievale*. Firenze: Sansoni, 1974.

Del Guerra, Giorgio. *Rustichello da Pisa.* Pisa: Nistri-Lischi, 1955.

Denholm-Young, N. *Collected Papers of N. Denholm-Young*. Cardiff: University of Wales Press, 1969.

Denholm-Young, N. *History and Heraldry 1254-1310.* Oxford: Clarendon Press, 1965.

Denholm-Young, N. "The Tournament in the Thirteenth Century." In *Studies in Medieval History presented to F.M. Powicke,* edited by R.W. Hunt, W.A. Pantin, and R.W. Southern, 257-62. Oxford: Clarendon Press, 1948.

De Pommerol, Marie-Henriette Jullien and Jacque Monfrin. *La bibliothèque pontificale à Avignon et à Peñiscola pendant le grande schisme d'Occident et sa dispersion*, vol. 2. Rome: École Française de Rome Palais Farnese, 1991.

Derolez, Albert. *The Palaeography of Gothic Manuscript Books: From the Twelfth to the Early Sixteenth Century.* London: Cambridge University Press, 2003.

Deschamps, Paul and Marc Thibout. *La peinture murale en France au début de l'époque gothique de Philippe-Auguste à la fin du règne de Charles V (1180-1380).* Paris: Centre National de la Recherche Scientifique, 1963.

Dessert, Marie-Claire. "Recherche sur les possessions des comtes-dauphins d'Auvergne

de la fin du XIIe au début du XVe siècle (1169-1426 environ). " Thèse, L'École Nationale des Chartes, Paris, 1955.

De Troyes, Chrétien. *Chrétien de Troyes Arthurian Romances*. Translated by William W. Kibler. London: Penguin, 1991.

De Ventadorn, Bernart. *A Bilingual Edition of the Love Songs of Bernart De Ventadorn in Occitan and English: Sugar and Salt.* Translated by Ronnie Apter. Lewiston: E. Mellen, 1999.

De Winter, Patrick M. "Castles and Town Residences of Philip the Bold, Duke of Burgundy (1364-1404)." *Artibus et Historiae* 4, no. 8 (1983): 95-118.

De Winter, Patrick M. *La bibliothèque de Philippe le Hardi, Duc de Bourgogne (1364-1404).* Paris: Editions du Centre National de la Recherche Scientifique, 1985.

Dixon-Kennedy, Mike. *A Companion to Arthurian and Celtic Myths and Legends*. Stroud: Sutton, 2004.

Donadello, Aulo. *Il libro de messer Tristano;"Tristano Veneto."* Venice: Marsilio, 1994.

Donoghue, Clayton N. *History of the Celts*. Victoria, BC: FriesenPress, 2013.

Donzet, Bruno and Christian Siret. "*Les fastes du gothique: le siècle de Charles V:*

Galeries nationales du Grand Palais." Paper presented *9 octobre 1981–1er février 1982.* Paris: Ministère de la culture, Editions de la Réunion des musées nationaux, 1981.

Doody, Margaret Anne. *The True Story of the Novel.* New Brunswick, NJ: Rutgers University Press, 1996

Duggan, Anne E. *Salonnières, Furies, and Fairies: The Politics of Gender and Cultural Change in Absolutist France*. Newark, DE: University of Delaware, 2005.

Dunbabin, Jean. *Charles I of Anjou: Power, Kingship and State-making in Thirteenth-century Europe*. London: Longman, 1998.

Entwistle, Will J. *The Arthurian Legend in the Literature of the Spanish Peninsula*. London: Kessinger Publishing, LLC, 1925.

Estienne, Michel. "Le pouvoir partagé: la basse Auvergne de 1150 à 1350." Thèses. École Nationale des Chartes, 1986.

Eusebi, Mario, ed. *Il manoscritto della Bibliothèque Nationale de France Fr. 1116*. Roma: Antenore, 2010.

Fabre, C. "Un sirventes de Cardinal, encore inédit en partie (1271-1272)." In *A Miscellany of Studies in Romance Languages and Literatures Presented to Leon E. Kastner*, 217-47. Cambridge: W. Heffer & Sons, 1932.

Fassò, Andrea. “La lotta col re-padre e il sogno della sovranità: gli eroi di Chrétien de Troyes.” In *“L’immagine riflessa*,” *Forme dell’identità cavalleresca,* edited by Andrea Fassò, Franco Cardini, and Mario Mancini, no. 12, 55-90. Genova: Tilger, 1989.

Fenik, Bernard. *Typical Battle Scenes in the Iliad*. Wiesbaden: F. Steiner, 1968.

Ferber, Stanley H. “Jean Pucelle and Giovanni Pisano*.” The Art Bulletin* LXVI, no. 1 (March 1984): 65-72.

Fligelman Levy, John. “Livre de Meliadus: an edition of the Arthurian compilation of B.N.F.f.fr. 340 attributed to Rusticien de Pise.” Ph.D diss., University of California, Berkeley, 2000.

Frappier, Jean. “Structure et sens du Tristan: version commune, version courtoise.” *CCM* (*Cahiers de Civilisation Médiévale)* 6 (1963): 255-60.

Frye, Northrop. *Anatomy of Criticism Four Essays*. Princeton (USA): Princeton University Press, 1971.

Folda, Jaroslav. *Crusader Manuscript Illumination at Saint-Jean D'Acre, 1275-1291*. Princeton, NJ: Princeton University Press, 1976.

Fournier, Gabriel. *Le château dans la France médiévale: Essai de sociologie monumentale*. Paris: Aubier Montaigne, 1978.

Fruhmorgen-Voss, H. “Tristan und Isolde in mittelalterlichen Bildzeugnissen.” In *Text und Illustration im Mittelalter,* edited by N. H. Ott, 119-39. Miinchen: C. H Beck, Verlagsbuchhandlung, 1975.

Fuchs, Barbara. *Romance*. New York, NY: Routledge, 2004.

Galbraith, V.H. “The Literacy of the English Medieval Kings.” *Proceedings of the British Academy,* 21 (1935): 201-35.

Galbraith, V.H. “Nationality and Language in Medieval England,” *TRHS (Transations of the Royal Historical Society)* 23 (1941): 113-128.

Galasso, Giuseppe. "Le forme del potere,classi e gerarchie sociali." In *Storia d'Italia*, vol. 1, 401-587. Torino: Giulio Einaudi, 1972.

Gaposchkin, Cecilia M. *The Making of Saint Louis: Kingship, Sanctity, and Crusade in the Later Middle Ages.* Ithaca: Cornell University Press, 2008.

Gardner, Edmund Garratt. *The Arthurian Legend in Italian Literature*. London: J.M. Dent & Sons, 1930.

Garzya, Antonio. “’Matière de Bretagne’ a Bisancio.” In *Il Mandarino e il quotidiano: Saggi sulla tetteratura tardoantica e bizantina,* 263-81. Napoli: Bibliopolis, 1983.

Gathercole, Patricia M. “Illustrations on the Manuscripts of Rusticien de Pise.” *Italica* 44

(1967): 400-408.

Gaunt, Simon. *Marco Polo's Le Devisement du Monde: Narrative Voice, Language and Diversity*. Woodbridge, Suffolk: Gallica, 2013.

Gidel, Charles. *Etudes sur la littérature grecque moderne. Imitations en grec de nos romans de chevalerie depuis le XIIe siècle.* Paris: Imp. Impèriale, 1864.

Girbea, Catalina. "Flatteries héraldiques, propagande politique et armoiries symboliques dans quelques romans arthuriens (XIIe-XIIIe siècles)." In *Signes et couleurs des identités politiques du Moyen Âge à nos jours,* edited by Denise Turrel, and Martin Aurell, 365-80. Rennes: Presses Universitaires de Rennes (PUR), 2008.

Goodman, Jennifer Robin. *Chivalry and Exploration: 1298-1630*. Woodbridge (GB): Boydell, 1998.

Goldwyn, Adam J. "Arthur in the East: Cross-cultural Translations of Arthurian Romance in Greek and Hebrew, Including a New Translation of The Old Knight." In *LATCH* 5 (2012): 75-105.

Gousset, Marie-Thérèse. "Etude de la décoration filigranée et reconstitution des ateliers: le cas de Gênes à la fin du XlII^e^ siècle." *Arte Médiévale* 2 (1987-88): 121-52.

Gransden, Antonia. *Historical Writing in England*. London: Routledge & Kegan Paul, 1974.

Green, Thomas. *Arthuriana: Early Arthurian Tradition and the Origins of the Legend*. Lincolnshire: Lindes, 2009.

Greenblatt, Stephen. *Cultural Mobility: A Manifesto*. Cambridge, UK: Cambridge University Press, 2010.

Grimbert Tasker, Joan. "Introduction to *Tristan and Isolde: A Casebook,* edited by J.T. Grimbert, xiii-ciii. New York and London: Garland Publishing, Inc., 1995.

Grivaud, G. "Literature, in Cyprus Society and Culture 1191-1374." In *Cyprus: Society and Culture 1191-1374*, edited by Angel Nicolaou-Konnari and Christopher Schabel, 219-84. Leiden: Brill, 2005.

Harvey, Ruth. "Courtly Culture in Medieval Occitania." In *The Troubadours: An Introduction*, edited by Simon Gaunt and Sarah Kay, 8-27. Cambridge, England: Cambridge University Press, 1999.

Havette, Frédérique. *St. Floret: Château à la gloire des chevaliers et de Tristan et Yseult (décor XIVe), Chastel église, tombes rupestres, ossuaire*. Clermont-Ferrand: Imprimerie Couty, 2014.

Havette, Frédérique. *Saint-Floret Puy de Dôme Château et site du Chastel, Eglise et tombes rupestres.* Clermont-Ferrand: Imprimerie Couty, 2014.

Heijkant, Marie-Josè. "From France to Italy: The Tristan Texts." In *The Arthur of the*

Italians: The Arthurian Legend in Medieval Italian Literature and Culture, edited by Gloria Allaire and F. Regina Psaki, 41-68. Cardiff: University Wales, 2014.

Henneman, John Bell. *Royal Taxation in Fourteenth Century France; the Development of War Financing, 1322-1356*. Princeton, NJ: Princeton University Press, 1971.

Herlihy, David. *Pisa in the Early Renaissance; A Study of Urban Growth*. New Haven: Yale University Press, 1958.

Hine Mundy, John. "Urban Society and Culture: Toulouse and Its Region." In *Renaissance and Renewal in the Twelfth Century*, edited by R. L. Benson and Giles Constable, with C. D. Lanham, 229-47. Cambridge, MA: Harvard University Press, 1982.

Holtus, Günter. "Che cos'è il franco-italiano?" In *Guida ai dialetti veneti*, edited by Manlio Cortelazzo, vol. X, 7-60. Padova: CLEUP (Cooperativa Libraria Editrice dell'Università di Padova), 1988.

Homer. *The Iliad*. , Translated by Robert Fitzgerald. Oxford: Oxford University Press, 2008.

Housley, Norman. *The Italian Crusades. The Papal-Angevin Alliance and the Crusades Against Christian Lay Powers, 1254-1343*. Oxford: Clarendon Press, 1982.

Huizinga, Johan, James S. Holmes, and Hans Van Marle. *Men and Ideas: History, the*

Middle Ages, the Renaissance: Essays. New York: Meridian, 1959.

Hyde, J.K. *Society and Politics in Medieval Italy. The Evolution of the Civil Life, 1000-1350.* London: Macmillan Press Ltd., 1973.

Iannella, Cecilia. "Alcune riflessioni su Pisa nel trecento. Intrecci tra politica, società, cultura." In *Pisa crocevia di uomini, lingue e culture: L'età medievale: Atti del convegno, Pisa, 25-27 Ottobre 2007*, 41-59. Roma: Aracne, 2007.

Ingham, Patricia Clare. *Sovereign Fantasies: Arthurian Romance and the Making of Britain.* Philadelphia: University of Pennsylvania, 2001.

Jameson, Fredric. "Magical Narratives: Romance as Genre." *New Literary History* 7, no. 1 (1975): 135-63.

Joris, André. "Autor du *devisement du monde*. Rusticien de Pise et l'Empereur Henri VII de Luxembourg (1310-1313)." *Le Moyen Âge* 100 (1994): 353-68.

Kaeuper, Richard W. *War, Justice, and Public Order. England and France in the Later Middle Ages.* Oxford: Clarendon Press, 1988.

Kahane, Henry. *The Lingua Franca in the Levant; Turkish Nautical Terms of Italian and Greek Origins.* Urbana: University of Illinois, 1958.

Keen, Maurice. *Chivalry.* New Haven & London: Yale University Press, 1984.

Kelly, Douglas. *Medieval French Romance.* New York: Twayne, 1993.

Kennedy, Elspeth. "The Knight as Reader of Arthurian Romance." In *Culture and the King. The Social Implications of the Arthurian Legend. Essays in Honor of Valerie Lagorio,* Edited by Martin B. Schichtman and James P. Carley, 70-90. New York: SUNY Series in Medieval Studies, 1994.

Kennedy, Elspeth. "The Scribe as Editor." In *Mélanges de langue et de littérature du Moyen Âge et de la Renaissance offerts à Jean Frappier*, 523-531. Geneva: Droz, 1970.

Ker, W. P. *Epic and Romance. Essays on Medieval Literature.* New York: Dover Publications, 1957.

King Arthur Legends of the Sword. Directed by Guy Ritchie. Performed by Charlie Hunnam and Jude Law. *King Arthur Legends of the Sword*. July 23, 2016. Accessed July 25, 2017. https://www.youtube.com/watch?v=4luDtkC3Oy0 . Movie Trailer

Kingsford, Charles Lethbridge. "John of London (d.1311)." In *Dictionary of National Biography 1885-1901,* vol. 29, 449. London: Smith & Elder, 1901.

Kleinhenz, Christopher, and Keith Busby, eds. *Medieval Multilingualism: The Francophone World and Its Neighbours*. Turnhout, Belgium: Brepols, 2010.

Kleinhenz, Christopher. "Italian Arthurian Literature." In *A History of Arthurian Scholarship,* edited by Norris J. Lacy, 190-96. Cambridge: D.S. Brewer, 2006.

Kleinhenz, Christopher, ed. *Medieval Italy: An Encyclopedia*, vol. 1-2. New York: Routledge, 2004.

Kohler, Erich. “Observations historiques et sociologiques sur la poésie des troubadours.” *Cahiers de Civilisation Médiévale (CCM*) 7, no. 25 (1964): 27-51.

Krueger, Roberta L., ed. *The Cambridge Companion to Medieval Romance*. Cambridge: Cambridge University Press, 2010.

Labarge, Margaret Wade. *Mistress, Maids and Men: Baronial Life in the Thirteenth Century*. London: Phoenix, 2003.

Laclotte, Michel. *L'École d'Avignon; La peinture en Provence aux XIVe et XVe siècles. Tables chronologiques, étude critique et historique, notes, index, bibliographie*. Paris: Éditions d’art Gonthier-Seghers, 1960.

Laclotte, Michel, and Dominique Thiebaut. *L'École d'Avignon. Écoles et mouvements de la peinture.* Paris: Flammarion, 1983.

Lacy, Norris J. *A History of Arthurian Scholarship*. Cambridge: D.S. Brewer, 2006.

Lacy, Norris J. "The Evolution and Legacy of French Prose Romance." In *The Cambridge Companion to Medieval Romance*, edited by Roberta L. Krueger, 167-82. Cambridge, UK: Cambridge University Press, 2000.

Lacy, Norris J, ed. *The New Arthurian Encyclopedia*. New York: Garland Publishing, Inc., 1991.

Lagomarsini, Claudio. “Le cas du compilateur compilé: Une œuvre inconnue de Rusticien de Pise et la réception de *Guiron le Courtois.*" *JIAS (Journal of International Arthurian Society)* 3, no. 1 (2015): 55-71.

Lagomarsini, Claudio. *Les Aventures des Bruns: Compilazione guironiana del secolo XIII attribuibile a Rustichello da Pisa*. Firenze: Sismel Edizioni del Galluzzo, 2014.

Lagomarsini, Claudio. “Rustichello da Pisa ed il Tristan en prose: Un esercizio di stemmatica arturiana.” *Studi mediolatini e volgari* 58 (2012): 49-77.

Lagomarsini, Claudio. "La tradizione della suite Guiron tra Francia e Italia: analisi dei duelli singolari." *Medioevo romanzo* 36 no.1 (2009): 98-127.

Langtoft, Pierre. In *Rerum Britannicarum Medii Aevi Scriptores: or, Chronicles and Memorials of Great Britain and Ireland during the Middle Ages*, 154-383. London: Longman, 1858.

Larner, John. *Marco Polo and the Discovery of the World.* New Haven and London: Yale University Press, 1999.

Larner, John. *Italy in the Age of Dante and Petrarch 1216-1380.* London and New York: Longman, 1983.

Larner, John. *Culture and Society in Italy 1290-1420*. New York: Charles Scribner’s Sons, 1971.

Lasater, Alice E. *Spain to England: A Comparative Study of Arabic, European, and English Literature of the Middle Ages*. Jackson: University of Mississippi Press, 1974.

Lathuillère, Roger. "La compilation de Rusticien de Pise." In Jauss and Köhler (eds.), *Grundriss der romanischen Literaturen,* IV/1: *Le roman jusqu'à la fin du XIIe siècle* (Winter 1978): 623-25.

Lathuillère, Roger. "Le manuscrit de Guiron le Courtois de la Bibliothèque Martin Bodmer, à Genève." In: *Mélanges de langue et de littérature du Moyen Âge et de la Renaissance offerts à Jean Frappier,* vol. 2, 567-74. Genève: Droz, 1970.

Lathuillère, Roger. "Le manuscrit de 'Guiron le Courtois.'" *Etudes de la tradition manuscrite et analyse critique publications romans et françaises*. Genève: Librairie Droz, 1966.

Legge, M.D. "The Lord Edward's Vegetius." *Scriptorium* 7 (1953): 262-65.

Léglu, Catherine. *Multilingualism and Mother Tongue in Medieval French, Occitan, and Catalan Narratives*. University Park, PA: Pennsylvania State University Press, 2010.

Leguay, Jean-Pierre. "La rue: Élément du paysage urbain et cadre de vie dans les villes du royaume de France et des grands fiefs aux XlV^e^ et XVe siècles." In *Actes des congrès de la Société des historiens médiévistes de l'enseignement supérieur public. 11e congrès, Lyon,* 11, no. 1, 23-60. Paris: Publication of the Sorbonne, 1980.

Leonelli, Marie-Claude. "Les peintures des livrées cardinalices d'Avignon. " *Monuments historiques* 170 (1990): 40-47.

Limentani, Alberto. *Dal roman de Palamedés ai cantari di Febus-el-Forte:Testi*

francesi e italiani del due e trecènto. Bologna: Commissione per i testi di lingua, 1962.

Loomis, Laura Hibbard. *Medieval Romance in England: A Study of the Sources and Analogues of the Non-cyclic Metrical Romances*. New York: Franklin, 1960.

Loomis, Roger Sherman. "Arthurian Influence on Sport and Spectacle." In *Arthurian Literature in the Middle Ages: A Collaborative History*, edited by Roger Sherman Loomis, 553-59. Oxford: Clarendon, 1959.

Loomis, Roger Sherman. "Edward I, Arthurian Enthusiast." *Speculum* 28, no.1 (1953): 114-27.

Loomis, Roger Sherman. "Chivalric and Dramatic Imitations of Arthurian Romance," *Mediaeval Studies in Memory of A. K. Porter*, vol. 1, 79-97. Cambridge, Mass, 1939.

Loomis, Roger Sherman and Laura Hibbard Loomis. *Arthurian Legend in Medieval Art*, pt. II. London: Oxford University Press, 1938.

Loomis, Roger Sherman. "'Chastel Bran,' 'Dinas Bran,' and the Grail Castle." In *A Miscellany of Studies in Romance Languages and Literatures Presented to Leon E. Kastner*, 342-350. Cambridge: W. Heffer & Sons, 1932.

Loomis, Roger Sherman. *Celtic Myth and Arthurian Romance*. New York: Columbia University Press, 1927.

Loomis, Roger Sherman. "Tristan and the House of Anjou." *Modern Language Review* 17, no.1 (1922): 24-30.

Löseth, Eilert. *Le roman en prose de Tristan, le Roman de Palamède, et la Compilation*

De Rusticate de Pise; analyze critique d'après les manuscripts de Paris. New York: B. Franklin, 1970. Rp

Luyster, Amanda R. "Courtly Images Far from Court: The Family St. Floret, Representation, and Romance." Ph.D diss., Harvard University, 2003.

Macek, Josef. "Gli intellettuali e la crisi comunale e nazionale." In *Storia della Società italiana*, edited by Franco Cardini, Josef Macek, and Maria Serena Mazzi, no. 7, 393-426. Milano: N. Teti, 1982.

MacKillop, James. *Myths and Legends of the Celts*. London: Penguin, 2006.

Maertz, Louise. *Key to a New Method for the Study of English Literature*. Chicago: S.C. Griggs, 1883.

Malory, Thomas. *Le Morte D'Arthur*. Translated by Helen Moore. Herts: Wordsworth Editions, 1996.

Manry, André-Georges. *Histoire de l'Auvergne*. Toulouse: Privat, 1974.

Map of France. Digital image. Pixabay. Accessed July 02, 2016. https://pixabay.com/en/map-of-france-translated-into-french-1290907/

Marnette, Sophie. *Narrateur et points de vue dans la littérature Française médiévale: une approche linguistique*. Bern: Lang, 1998.

Marthon, Véronique. *Étude du patrimoine médiéval (V^e^-XVe siècle) de la paroisse de Saint-Floret (Puy de Dôme).* Mémoire de Maîtrise sous la direction de Anne Courtillé et Bruno Philip, U.F.R. (Unité de Formation et de Recherche) Clermont II, Clermont-Ferrand, 2000.

McCormick, Stephen. P. "Remapping the story: Franco-italian epic and lombardia as a narrative community (1250--1441)." PhD diss., University of Oregon, 2011.

McCracken, Penny. "The Old French Vulgate Cycle." In *The Cambridge Companion to Medieval French Literature,* edited by Simon Gaunt and Sarah Kay, 35-47. New York: Cambridge University Press, 2008.

Meiss, Millard. *French Painting in the Time of Jean de Berry.* New York: Pierpont Morgan Library and George Braziller, 1967-1974.

Ménard, Philippe. "L'illustration du *Devisement du monde* de Marco Polo." *Bulletin de l'Université Tokyo-Mesei, Faculté de civilisation japonaise et comparée* 2 (1994) : 1-27.

Meneghetti, Maria Luisa. "*Scrivere in carcere nel Medioevo."* In *Studi di filologia e letteratura italiana in onore di Maria Picchia Simonelli,* edited by P. Frassica, 185-99. Alessandria: Edizioni dell'Orso, 1992.

Mentré, Mireille. "Remarques sur l'iconographie des romans arthuriens (A propos de

quelques exemples)." *Cahiers de civilisation médiévale (CCM)* 29e, no. 115 (July-Sept. 1986): 231-242.

Meyer, Paul. “De l’expansion de la langue Française en Italie pendant le Moyen Âge.” In *Atti del congresso internazionale di scienze storiche*, 61-104. Rome : Tipografia dell’Accademia, 1904.

Micha, Alexandre. “Stéréotypes et tics stylistiques.” In *Essais sur le cycle du Lancelot-Graal, publications romanes et françaises*, 227-50. Geneva: Droz, 1987.

Michieli, Adriano Augusto. “Chi fu e che cosa fece Rusticiano da Pisa?.” *Lettere ed Arti* 84 (1924-1925): 321-37.

Monaghan, Patricia. *The Encyclopedia of Celtic Mythology and Folklore*. New York: Facts On File, 2004.

Monfrin, Jacques. *Études de philologie romane.* Geneva: Librairie Droz S.A., 2001.

Monmouth, Geoffrey. *The Historia Regum Britannie of Geoffrey of Monmouth*. D.S. Brewer, 2001.

Morato, Nicola. *Il ciclo di "Guiron le Courtois:" Strutture e testi nella tradizione manoscritta*. Firenze: Edizioni del Galluzzo (Archivio Romanzo), 2011.

Morvan, Yves. "Des témoins ressuscités: Peintures murales à la cathédrale de Clermont-Ferrand." *Monuments historiques* 40, no. 197 (1995), 30-33.

Munby, Julian, Richard W. Barber, and Richard Brown. *Edward III's Round Table at Windsor: The House of the Round Table and the Windsor Festival of 1344*. Woodbridge, Suffolk: Boydell, 2007.

Nicol, Donald M. *Byzantium and Venice: A Study in Diplomatic and Cultural Relations.* Cambridge: Cambridge University Press, 1992.

Norwich, John Julius. *The Great Sea: A History of the Mediterranean.* New York: Doubleday, 2006.

Ong, Walter J. "Text as Interpretations." In *Oral Tradition in Literature Interpretation in Context*, edited by John Miles Foley, 147-169. Columbia, MO: University of Missouri Press, 1986.

Ostler, Nicholas. *Empires of the Word: A Language History of the World.* New York: Harper Perennial, 2006.

*Oxford English Dictionary, "R*omance," accessed July 17, 2017,

http://www.oed.com.ezproxy.lib.utexas.edu/view/Entry/167065?rskey=sbSgrO&result=1

Pailloncy, J. B., and Albert Remacle. *Index des noms du Dictionnaire des fiefs de la Basse Auvergne du comte de Remacle*. Saint Cloud: C.G.H.A.V., 1987.

Panofsky, Erwin. *Gothic Architecture and Scholasticism*. New York: Meridian Books, 1957.

Panofsky, Erwin. *Renaissance and Renascences in Western Art.* Copenhagen: Russak, 1960.

Parker, Patricia A. *Inescapable Romance: Studies in the Poetics of a Mode*. Princeton: Princeton University Press, 1979.

Parsons, John Carmi. *Eleanor of Castile: Queen and Society in Thirteenth-Century England*. New York: St. Martin's, 1995.

Paris, Paulin. *Les manuscrits françois de la bibliothéque du roi leur histoire et celle des textes allemands, anglois, hollandois, italiens, espagnols de la même collection,* vol. 2, 355-60. Paris: Techener, 1836-48.

Pemberton, Lyn. "Authorial Interventions in the *Tristan en Prose*." *Neophilogus* 68 (1984): 481-497.

Perriccioli Saggese, Alessandra. *I romanzi cavallereschi miniati a Napoli.* Naples: Soc. Ed. Napoletana, 1979.

Petralia, Giuseppe. "Genesi ed identità della Toscana medievale." *Bollettino Storico Pisano* 69 (2000): 237-49.

Pickford, Cedric Edward. *L'evolution du roman arthurien en prose vers la fin du Moyen*

Âge d'apres le manuscrit 112 du fonds français de la Bibliothèque Nationale. Paris: Nizet, 1960.

Pickford, Cedric Edward. "Miscellaneous French Prose Romances." In *Arthurian Literature in the Middle Ages. A Collaborative History*, edited by Roger Sherman Loomis, 348-392. Oxford: Clarendon Press, 1959.

Pistarino, Geo. "Politica ed economia del Mediteraneo nell'età della Meloria." In *Genova, Pisa, e il Mediterraneo tra Due e Trecento: Atti della Società Ligure di storia patria* vol. 24, pt. 2, 10-23. Genova: La Società Ligure di storia patria, 1984.

Polo, Marco. *Il Milione, prima edizione integrale.* Edited by Luigi Foscolo Benedetto. Firenze: L.S. Olschki, 1928.

Polo, Marco. *Il Milione*. Translated by Maria Bellonci. Edited by Anna M. Rimoaldi. Milano: Mondadori, 1992.

Poloni, Alma. "Gli uomini d'affari Pisani e la perdita della Sardegna." In *Per Marco Tangheroni. Studi su Pisa e sul Mediterraneo Medievale offerti dai suoi ultimi allievi*, edited by Cecilia Iannella, 157-84. Pisa: ETS, 2005.

Poloni, Alma. *Trasformazioni della Società e mutamenti delle forme politiche in un comune italiano: Il popolo a Pisa.* Pisa: ETS edizioni, 2004.

Porcher, Jean. *Medieval French Miniatures*. New York: H.M. Abrams, 1960.

Powicke, F.M. *King Henry III and the Lord Edward: The Community of the Realm in the*

Thirteenth Century, vol. 1-2. Oxford: Clarendon Press, 1950.

Prestwich, Michael. *Edward I*. Berkeley: University of California, 1988.

Prestwich, Michael. *War, Politics and Finance Under Edward I.* Totowa, New Jersey: Rowman and Littlefield, 1972.

Psaki, F. Regina. "The Book's Two Fathers: Marco Polo, Rustichello da Pisa, and *Le Devisement du Monde.*" *Mediaevalia* 32 (2011): 69-97.

Psaki. F. Regina."Chivalry and Medieval Italian Romance." In *The Cambridge Companion to Medieval Romance*, edited by Roberta L. Krueger, 203-17. Cambridge, UK: Cambridge University Press, 2000.

Psaki. F. Regina, ed. "Introduction." In *Arthuriana. Special Issue on Le Roman de Silence*, 7.2 (1997). [Dallas: Southern Methodist University Press], 3-6.

Putter, Ad and Keith Busby. Introduction to *Medieval Multilingualism: The Francophone World and Its Neighbours*, edited by Christopher Kleinhenz and Keith Busby, 1-13. Turnhout, Belgium: Brepols, 2010.

Quint, David. *Epic and Empire: Politics and Generic Form from Virgil to Milton*. Princeton, NJ: Princeton University Press, 1993.

Quint, David. *The Boat of Romance and Renaissance Epic*. Hanover: University of New

England, 1985.

Raban, Sandra. *England under Edward I and Edward II, 1259-1327*. Oxford: Blackwell Publishers Ltd., 2000.

Raffa, Guy P. *The Complete Danteworlds. A Readers Guide to the Divine Comedy*. Chicago and London: University of Chicago Press, 2009.

Rajna, Pio. *Le fonti dell'Orlando Furioso ... seconda edizione corretta e accresciuta*. Firenze: Sansoni, 1900.

Rajna, Pio. In *Opere minori di Dante Alighieri* - Edizione Critica of the Società Dantesca Italiana. Firenze: Successori Le Monnier, 1896.

Reuter, Timothy. "Nobles and Others: The Social and Cultural Expression of Power Relations in the Middle Ages." In *Nobles and Nobility in Medieval Europe. Concepts, Origins, Transformations,* edited by Anne J. Duggan, 85-98. Woodbridge, Suffolk: The Boydell Press, 2000.

Richmond, Velma Bourgeois. *The Legend of Guy of Warwick.* New York and London: Garland Publishing, Inc., 1996.

Rider, Jeff. "Roger Sherman Loomis: Medievalism as Anti-modernism." In *Medievalism in North America,* edited by K. Verduin, 143-62. Cambridge: D.S. Brewer: 1994.

Riley-Smith, Jonathan Simon Christopher. *The Crusades: A History*. New Haven: Yale University Press, 2005.

Rizzo Nervo, Francesca. *Il Vecchio Cavaliere*. Soveria Mannelli (Catanzaro): Rubbettino, 2000.

Rizzo Nervo, Francesca. "Il 'mondo dei padri' nella metafora del Vecchio Cavaliere." *Quaderni del siculorum gymnasium* 15 (1985): 115-128.

Rogers, Clifford J. "The Age of the Hundred Years War." In: *Medieval Warfare: A History*, edited by M.H. Keen, 136-60. Oxford: Oxford University Press: 2002.

Rothrauff, Elizabeth P. "Pisa." In *Medieval Italy: An Encyclopedia*, edited by Christopher Kleinhenz, John Barker, Gail Geiger, and Richard Lansing, vol. 2, 899-907. New York: Routledge, 2004.

Rushing, James A. *Images of Adventure: Ywain in the Visual Arts.* Philadelphia: University of Pennsylvania, 1995.

Rutenburg, Victor I. "La crisi dell'ordinamento comunale e i moti cittadini." In *Storia della società italiana*, edited by Franco Cardini, Josef Macek, and Maria Serena Mazzi, no. 7, 361-391. Milano: N. Teti, 1982.

Sabatini, Francesco. "La cultura a Napoli nell'età angioina." In *Storia di Napoli*, vol. IV/2. Napoli: Cava dei Tirenni, 1974.

Salter, Elizabeth. *English and International Studies in the Literature, Art and Patronage of Medieval England.* Edited by Derek Pearsall and Nicolette Zeeman. Cambridge: Cambridge University Press, 1988.

Saxl, F. "Il romanzo di Troia nell'arte francese e italiana.*"* In *La storia delle immagini*, 31-45. Bari: Laterza, 1982.

Scaglione, Antonio. *Knights at Court: Courtliness, Chivalry, and Courtesy from Ottonian Germany to the Italian Renaissance.* Berkley: University of California Press, 1991.

Scattergood, John. "Authority and Resistance: The Political Verse." In *Studies in the Harley Manuscript: The Scribes, Contents, and Social Contexts of British Library MS Harley 2253*, edited by Susanna Fein, 163-217. Kalamazoo: Western Michigan University, Medieval Institute Publications, 2000.

Scherer, Margaret R. *About the Round Table*. New York: Metropolitan Museum of Art, 1945.

Schmidt, Victor M. "Northern artists and Italian art during the late Middle Ages: Jean Pucelle and the Limbourg brothers reconsidered." In *Italy and the low countries--artistic relations: the fifteenth century : proceedings of the symposium held at Museum Catharijneconvent, Utrecht, 14 March 1994*, 21-38. Firenze: Centro di Istituto Universitario Olandese di Storia dell'Arte, 1999.

Schmolke-Hasselmann, Beate. *The Evolution of Arthurian Romance. The Verse Tradition from Chrétien to Froissart.* Cambridge: Cambridge University Press, 1998.

Sharrer, Harvey L. *A Critical Bibliography of Hispanic Athurian Material,* vol. I. London : Grant & Cutler Ltd., 1977.

Segre, Cesare. "What Bakhtin Left Unsaid: The Case of the Medieval Romance."

In *Romance: Generic Transformation from Chreítien De Troyes to Cervantes*, edited by Kevin Brownlee and Marina Scordilis Brownlee, 23-46. Hanover: University of New England, 1985.

Serre, Antoine. “Auvergne: le roman de Tristan et Iseut par les fresques du château de Saint-Floret.” *Archeologia* (Paris): (later Archeologia [Dijon]) 86: (1975): 31-41.

Short, Ian. *Manual of Anglo-Norman.* London: Anglo-Norman Text Society, 2007.

Sklar, Elizabeth Sherr, and Donald L. Hoffman, eds. *King Arthur in Popular Culture*. Jefferson, NC: McFarland, 2002.

Spiegel, Gabrielle M. *Romancing the Past: The Rise of Vernacular Prose Historiography in Thirteenth-century France*. Berkeley: University of California, 1995.

Southern, R. W. *Medieval Humanism: And Other Studies*. Oxford: B. Blackwell, 1970.

Speer, Mary B. “The Long and the Short of Lancelot’s Departure from Logres.

Abbreviation as rewriting in La Mort le Roi Artu." In *Text and Intertext in Medieval Arthurian Literature*, edited by Norris J. Lacy, 219-39. New York and London: Garland Publishing, Inc., 1996.

Staniland, Kay. "Court Style, Painters, and the Great Wardrobe." In: *England in the Fourteenth Century: Proceedings of the 1985 Harlaxton Symposium*, edited by W. M. Ormrod, 236-246. Woodbridge: Boydell Press, 1986.

Stanton, Charles D. *Medieval Maritime Warfare*. South Yorkshire: Pen and Sword Ltd., 2015.

Stephens, Walter. *Giants in Those Days: Folklore, Ancient History, and Nationalism*. Lincoln: University of Nebraska, 1989.

Sterling, Charles. "Pour la peinture en Auvergne au XVe siècle." *L'Œil* 136 (1966): 4-17.

Strickland, Agnes. "Eleanora of Castile," In *Lives of the Queens of England from the Norman Conquest with Anecdotes of their Courts*, vol. II, 146-181. London: William Clowes & Sons, 1841.

Stones, Allison. "Arthurian Art since Loomis." In *Artuts rex, II: Acta Conventus Lovaniensis 198* edited by W.V. Hoecke, G. Tournoy, and W. Verbeke, 21-78. Leuven: Leuven University Press, 1991.

Tangheroni, Marco. "Nobiltà e popolo nella Pisa del duecento. Per una rilettura della

canzone politica di Panuccio del Bagno." *Rivista di Letteratura Italiana* 10 (1992): 9-24.

Tangheroni, Marco. *Medioevo tirrenico: Sardegna, Toscana,e Pisa*. Ospedaletto, Pisa: Pacini, 1992.

Tangheroni, Marco. "La situazione politica pisana alla fine del duecento tra pressioni esterne e tensioni interne." In *Atti della Società Ligure di storia patria,* vol. 24, pt. 2, 51-83. Genova: La Società Ligure di storia patria, 1984.

Tangheroni, Marco. *Politica, commercio, agricoltura a Pisa nel trecento*. Pisa: Pacini, 1973.

Tasker Gimbert, Joan. "The 'Matter of Britain' on the Continent and the Legend of Tristan and Iseult in France, Italy, and Spain." In *A Companion to Arthurian Literature*, edited by Helen Fulton , 145-59. Hoboken: Wiley Blackwell, 2009.

Taylor, Jane H.M. *Rewriting Arthurian Romance in Renaissance France: From Manuscript to Printed Book.* Cambridge: D.S. Brewer, 2014.

Teyssot, Josiane. "Pouvoirs et contre-pouvoirs politiques en Auvergne durant l'apanage de Jean de Berry, 1360-1416." In *Actes des congrès de la Société des historiens médiévistes de l'enseignement supérieur public. 23e congrés Brest,* 247-60. Paris: Publication of the Sorbonne, 1992.

Thorpe, Lewis. "'Mastre Richard,' A Thirteenth Century Translator of the "De Re Militari" of Vegetius," *Scriptorium* 6 (1952): 39-50.

Throop, Palmer A. "Criticism of Papal Crusade Policy in Old French and Provencal." *Speculum* 13, no. 4 (1938): 379-412.

Toesca, P. *La pittura e la miniature nella Lombardia*. Milan: Hoepli, 1912.

Thomas. *Le roman de Tristan*. Translated and compiled by and Joseph Bedier. Paris: New York: Firmin Didot and Johnson Reprint Corp., 1902.

Trachsler, Richard. "Rustichello, Rusticien e Rusta Pisa. Chi ha scritto il romanzo arturiano?," edited by Giuseppina Brunetti and Gabriele Giannini. *Quaderni di filologia romanza* 19 (2007): 107-23.

Trade Routes of Europe: Digital Image. Wikimedia Commons. Accessed July 02, 2016. https://upload.wikimedia.org/wikipedia/commons/e/e1/Late_Medieval_Trade_Routes.jpg

Trotter, D.A. M*edieval French Literature and the Crusades (1100-1300)*. Genève: Librairie Droz, 1988.

Turville-Petre, Thorlac. *England the Nation: Language, Literature, and National Identity,1290-1340.* Oxford: Clarendon Press, 1996.

Vale, Malcom. *The Princely Court Medieval Court and Culture in North-West Europe*

1270-1380. New York: Oxford University Press, 2001.

Vale, M. G. A. *The Origins of the Hundred Years War: The Angevin Legacy, 1250-1340*. Oxford: Clarendon, 1996.

Vance, Eugene. *From Topic to Tale: Logic and Narrativity in the Middle Ages*. Minneapolis: University of Minnesota Press, 1987.

Van Coolput, Colette-Anne. "Aventures querant et le sens du monde. Aspects de la réception productive des premiers romans du Graal cycliques dans le 'Tristan en prose." In *Mediaevalia lovaniensia,* Series I, Studia XIV. Louvain: Leuven University Press, 1986.

Venuti, Lawrence. *The Translator's Invisibility: A History of Translation.* London & New York: Routledge: 1995.

Vernon, William Warren. *Readings on the Inferno of Dante Chiefly Based on the Commentary of Benvenuto da Imola*. London: MacMillan, 1894.

Vinaver, Eugène. *The Rise of Romance.* New York: Oxford University Press, 1971.

Vinaver, Eugène. *Form and Meaning in Medieval Romance*. Cambridge: Modern Humanities Research Association, 1966.

Vinaver, Eugène. "The Prose Tristan." In: *Arthurian Literature in the Middle Ages: A*

Collaborative History, edited by Roger Sherman Loomis. Oxford: Clarendon, 1959.

Vitullo, Juliann M. *The Chivalric Epic in Medieval Italy*. Gainesville: University of Florida Press, 2000.

Vitz, Evelyn Birge. *Orality and Performance in Early French Romance*. Suffolk: D.S. Brewer, 1999.

Vreese, Willem de, Herman Vander Linden, and Paul de Keyser, eds. *Lodewijk van Velthem's voortzetting van den spiegel historiael (1248-1316)*, vol. 1, 295-321. Bruxelles: Paleis der Academiën, 1931.

Wadsworth, Rosalind M. "Historical Romance in England: Studies in Anglo-Norman and Middle English Romance," PhD thesis, University of York, 1972, 168-325.

Walters, Lori J., ed. *Lancelot and Guinevere: A Casebook*. New York: Garland Publishing, Inc., 1996.

West, G. D. *An Index of Proper Names in French Arthurian Prose Romances*. Toronto: University of Toronto Press, 1978.

West, G. D. *An Index of Proper Names in French Arthurian Verse Romances, 1150-1300*. Toronto: University of Toronto Press, 1969.

Wetzel, René and Fabrice Fluchiger, eds. *Au-delà de l'illustration: Teste et image au Moyen Âge, approaches méthodologiques et pratiques.* Zurich: Chronos, 2009.

Wetzel, René. "La famille des Vintler et le programme des peintures murales de Castelroncolo (Runkelstein) près Bolzano dans le contexte de la civilisation courtoise." In: *Paroles de murs: peinture murale, littérature et histoire au Moyen Âge*, 75-89. Grenoble: Centre de Recherche en Histoire et Histoire de l'Art. Italie, Pays Alpins (CRHIPA) – Université Pierre Mendès [France] (UPMF), 2007.

Whitaker, Muriel. "Early Arthurian Art." In *A History of Arthurian Scholarship*, edited by Norris J. Lacy, 198-219. Woodbridge, Suffolk: D.S. Brewer, 2006.

Whitaker, Muriel A. *The Legends of King Arthur in Art.* Woodbridge, Suffolk: D.S. Brewer, 1990.

Wood, Frances. *Did Marco Polo Go to China?* Boulder, CO: Westview, 1996.