HANDBOOK FOR

ONE-ACT PLAY

DIRECTORS, JUDGES AND CONTEST MANAGERS

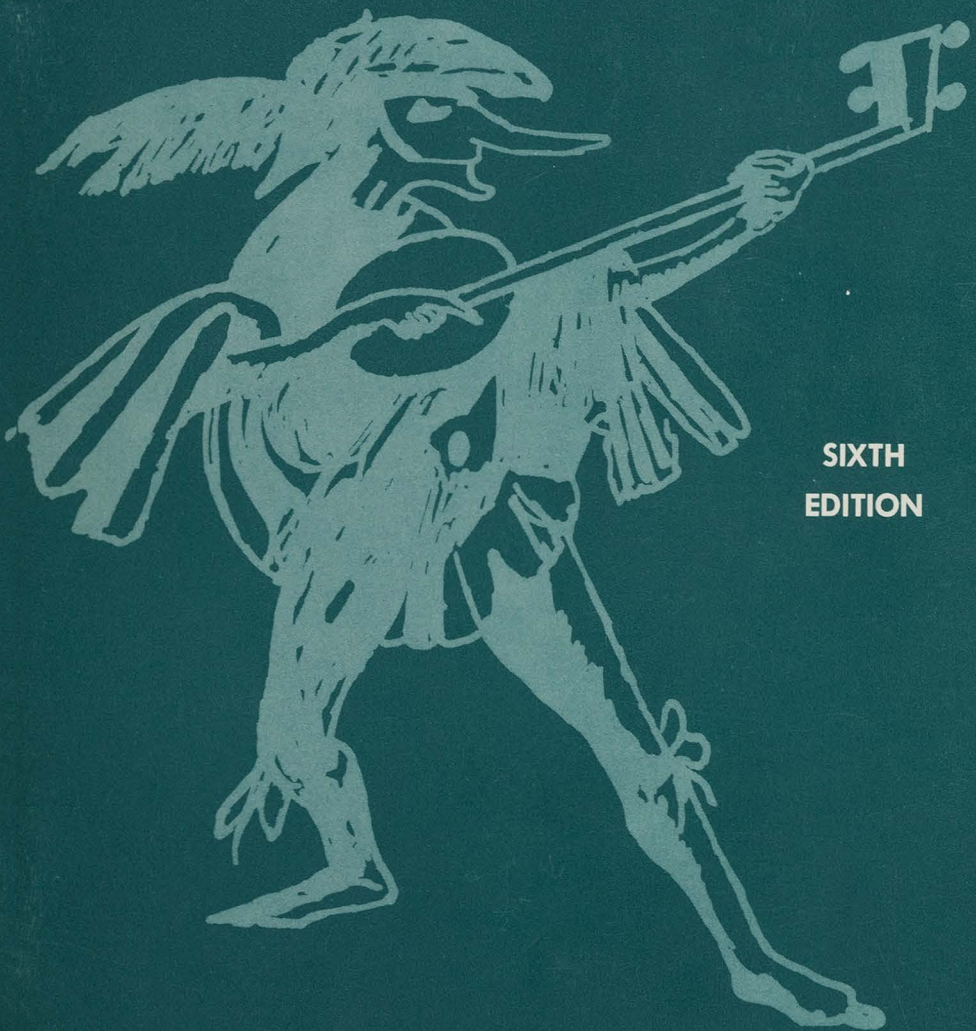

SIXTH EDITION

THE UNIVERSITY INTERSCHOLASTIC LEAGUE

The University of Texas Publication Number 7017, September 1, 1970

Written by

ROY M. BROWN, W. LYNN MURRAY, B. WAYNE PEVEY, F. LOREN WINSHIP

Additional copies of this publication may be procured from the University Interscholastic League, The University of Texas, Box 8028, University Station, Austin, Texas 78712.

50 Cents per Copy

Statement on Equal Educational Opportunity

With respect to the admission and education of students, with respect to the availability of student loans, grants, scholarships, and job opportunities, with respect to the employment and promotion of teaching and nonteaching personnel, with respect to the student and faculty activities conducted on premises owned or occupied by the University, and with respect to student and faculty housing situated on premises owned or occupied by the University, The University of Texas at Austin shall not discriminate either in favor of or against any person on account of his or her race, creed, color, or national origin.

THE UNIVERSITY OF TEXAS PUBLICATION
NUMBER 7017 SEPTEMBER 1, 1970
Published twice a month by The University of Texas at Austin, University Station, Austin, Texas 78712. Second-class Postage Paid at Austin, Texas.

THE UNIVERSITY INTERSCHOLASTIC LEAGUE

HANDBOOK

for

One-Act Play

DIRECTORS, JUDGES
and
CONTEST MANAGERS

SIXTH EDITION

"In a well-planned one-act play contest, there are no losers."

CONTENTS

Page

INTRODUCTION 3
GUIDE FOR THE ONE-ACT PLAY CONTEST DIRECTOR . . . 4
Educational Theatre: A Definition 4
One-Act Play Contest Deadlines 6
Your Responsibilities as a Play Director 6
Selecting Your Contest Play 7
Planning Meetings 8
The Contest 9
When You Win First Place 11
One-Act Play Contest Rules 11
GUIDE FOR THE ONE-ACT PLAY CONTEST CRITIC JUDGE . 19
The Function of the Critic Judge 19
Pre-contest Judging Procedures 19
Working Conditions for the Critic Judge 20
Standards for Judging One-Act Plays 20
Selection of the All-Star Cast 22
Critique Problems for the Critic Judge 22
GUIDE FOR THE ONE-ACT PLAY CONTEST MANAGERS . . 25
Pre-contest Planning 25
Contest Procedures 25
SUPPLEMENTS 28
Play Selection Policy of the TETA 28
An Approved List of Short Plays for Contest 29
An Approved List of Long Plays for Contest 35
Ineligible Plays 40
The Drama Loan Library 41
Publishers 41
Approved Unit Set 42
Recommended Facilities 47
Definitions 47
Bibliography 47

INTRODUCTION

This HANDBOOK was prepared in order that individual play directors, critic judges, and contest managers might be encouraged to strive more effectively to achieve the purpose of the One-Act Play Contest and to make it a more meaningful creative educational experience for all participants.

The aims of the One-Act Play Contest are to: a) satisfy the competitive, artistic spirit with friendly rivalry among schools, emphasizing high quality performance in this creative art; b) foster appreciation of good acting, good directing, and good drama; c) promote interest in that art form most readily usable in leisure time during adult life; d) learn to lose or win graciously, accepting in good sportsmanship the judge's decision and his criticism with a view to improving future productions; and e) increase the number of schools which have adopted drama as an academic subject in school curricula.

GUIDE FOR THE ONE-ACT PLAY CONTEST DIRECTOR

Educational Theatre: A Definition

Modern educational theatre is a creative, practical activity. Its participants learn to do by doing those scores of tasks which are required of them as they are taught the art of play production. They learn to think independently because the development of individual thought and action is one of the basic elements of play production. They learn to appreciate the dignity of human labor because the theatre demands a great amount of human labor. They learn to master the techniques of handling tools, needles, pigment, electrical equipment, paint, lumber, and cloth. They learn to sell tickets and advertising, to make and upholster furniture, and to launder clothing. They draw upon their knowledge of mathematics, physics, speech, art, journalism, music, English, dance, history, literature, industrial arts, psychology, homemaking, and foreign languages, and combine all these with specific training in the art of theatre as they work together to produce a single play.

Modern educational theatre is a creative, culturally enlightening activity. Its participants learn to appreciate the great literary masterpieces of Moliere, Shakespeare, Goethe, Shaw, and the Greeks, because the works of these master must be thoroughly studied and understood if they are to be brought to life on the stage. An appetite for good literature is created, and motivation for literary appreciation is strongly established by the requisites of play production.

Modern educational theatre is a creative, democratic activity. Students learn the principles of democracy and civic responsibility because these principles are inherent in an effective educational theatre program. Working together in close harmony as members of a play company, establishing the *esprit de corps* which occurs so naturally during rehearsal periods, assuming responsibilities as crew members, coordinating all work projects to meet a deadline, settling with tolerance and understanding the differences of opinion and procedure which are always present in a free society, learning to command and be commanded: these are aspects of functional democracy and community leadership which are encountered daily by all who work in play production. Such an activity makes a definite contribution to the improvement of democratic processes of the community.

Modern educational theatre is a creative activity which has personal and therapeutic values. The student develops such qualities as self-confidence, poise, cooperativeness, initiative, resourcefulness, self-control and self-discipline, and a sense of understanding and appreciation of the abilities and efforts of others. He learns the importance of systematic organization, orderly procedure, and detailed planning because even the most casual type of play production encourages and requires the development of organizational abilities. The student in the educational theatre experiences keenly the feeling of belonging; he is provided with a controlled outlet for physical, emotional, and mental disturbances which seem common to most young people. He discovers through dramatics a more definite purpose for staying in school and an acceptable reason for giving closer attention to the other scholastic pursuits. If he is shy, he is taught to overcome shyness. If he is too aggressive, he learns to temper his aggressiveness with consideration for others. In play production he finds an opportunity to expend excess energy in a constructive and educationally productive way, to develop his imagination, and to use his leisure hours to better advantage.

Modern eduational theatre is a creative activity which has definite vocational possibilities. One of the reasons for the number of collegiate drama courses has been the demand for public school and university teachers of dramatics. Eduational drama also exists for the purpose of giving training to those students who seek careers in television, community and professional theatre, the dance, and the motion picture industry.

Therefore, the educational theatre is a creative segment of academic life which becomes more than an extracurricular activity, more than a medium of entertainment, and more than just a class play. It provides actual experience in practicing democratic principles of living which increases the student's potential value to his community. It supplies personal and therapeutic values which give him a greater emotional and mental stability and which enhance his chance to provide an adequate livelihood for himself and his dependents. He can find somewhere in the diversified intricacies of play production an opportunity to use all of his talents and capabilities. Each of his needs is met in the educational theatre because of the scope and comprehensiveness of its activities.

One-Act Play Contest Deadlines

December 1. Deadline for submitting One-Act Play Enrollment Card. The One-Act Play Enrollment Card is mailed in September to the principal or superintendent of each high school that held League membership the previous year.

It must be completed in full and returned to the State Office postmarked no later than December 1. Cards postmarked after the deadline will not be accepted, and the school will be ineligible to participate in the One-Act Play Contest for the current year.

Since checking "yes" on the Enrollment Card obligates the school to participate in the contest, *the signature of the principal or superintendent is mandatory.* Failure to compete in the district contest after a school has agreed to participate can result in suspension from this event during the following year.

February 14. Deadline for requesting permission to produce plays not on the Approved List of Long or Short Plays. [See Rules 1,g,1) and 2,a.]

February 14. Deadline for requesting additions to the basic set. [See Rules 1,g,2); 2,a,2); and 2,b,5).]

March 2. Deadline for submitting One-Act Play Title Entry Card. Each February the State Office mails to the one-act play director of each school entering the contest an Official One-Act Play Title Entry Card. [See Rule 1,g,3).]

Your Responsibilities as a Play Director

As the director of your school's entry in the League's One-Act Play Contest, you will discover at least four important responsibilities. One is to select a high quality play which will best represent the talents of your students and your own capabilities and which will reflect with credit upon the educational theatre program of your school.

Another responsibility requires that you direct your production in a manner which will result in the finest quality performance you and your company are able to achieve.

You can hardly expect to gain maximum educational advantages from play competition unless you are familiar with matters pertaining to contest management and adjudication. The astute director will read carefully the "Guide for One-Act Play Critic Judges," the "Guide for

One-Act Play Contest Managers," and the "Supplements," all of which are contained in this HANDBOOK.

Then there is the responsibility concerning your attitude and that of your company toward play contests. Play competition, unlike some types of contest where the outcome can be measured by numerical totals, can be "won" even though the first place award may be to another company. Directors and students gain from participation in play production, and no decision can take these benefits away from them. You and your company should accept this concept when you enter the contest. You must realize there is literal truth in the statement, "In a well-planned one-act play contest, there are no losers." While it is natural and entirely in keeping with the objectives of modern education to strive for first place, the purposes of competition in the creative arts are lost when students and directors behave in an unbecoming manner if they fail to win. You, as director of a student play company, have a significant duty to perform in this respect. It is as important as is any other aspect of play competition.

Selecting Your Contest Play

This is one of your most difficult tasks. The values which accrue to your students from participation in play production will depend in large measure upon your knowledge of plays and your ability to select the one best suited to your situation.

First, you must become completely familiar with the One-Act Play Contest rules that appear in this HANDBOOK. Next, consult the Play Lists found in the "Supplements."

Procedures for requesting permission to use a play not on the Lists will be found in Rule 2. All decisions pertaining to approval of such plays are made by the League's Play Appraisal Committee. Plays are disapproved usually because of 1) a morbid or sordid theme, 2) an unwholesome plot or subject, 3) being badly written or offering insufficient challenge, and 4) violating rules governing play selection.

You should exercise great caution when selecting a play from the Approved List of Long Plays, or any long play, unless you are skilled in cutting and editing. It is recommended that you choose an entire act or scene rather than cut and edit it speech-by-speech.

Scenes from all plays on the Approved List of Long Plays have been produced previously in League competition. However, this does not necessarily mean the publishers will again approve the same cuttings. When you select scenes from a long play on the List, you must in every instance obtain written permission from the publisher or author before

submitting the Official One-Act Play Contest Title Entry Card. Also, you must obtain written evidence that royalty for performance has been paid.

All short plays or cuttings of long plays must comply in every respect with Rule 2 of the One-Act Play Contest.

Planning Meetings

The district One-Act Play Contest is administered by the District Executive Committee. In order that this Committee may have the benefit of your training and experience in educational theatre, and that you may have an opportunity to participate in conducting your contest, you are urged to attend your district play contest planning meeting.

Each year the State Office asks one school in the district to provide a chairman of the planning meeting. This is done early enough to permit him to hold a meeting well before the District Executive Committee makes plans for the Spring Contests. The chairman is instructed to schedule a meeting and notify all contest play directors in the district of the time and place. He is not the Contest Manager of the district; his job is to arrange for the district one-act play planning meeting and serve as its presiding officer.

These are some of the matters which should appear on the agenda:

1. Date of district One-Act Play Contest: It should not conflict with other spring contests. Check the League calendar for available dates. Recommend zone contests when there are more than eight entries.
2. Time of contest: Arrange rehearsal and performance schedules which will allow ample time for the critic judge's critique and insure the largest possible audience.
3. Contest site: Urge selection of a site which has a theatre type building with an adequate stage, lighting and light control equipment, suitable dressing room space, an Approved Unit Set (see "Supplements" of this HANDBOOK), and necessary set pieces and properties described in the Rules.
4. Agree upon first choice and second choice expert critic judges. Request the planning meeting chairman to recommend to the District Executive Committee that these choices be approved and that the first choice judge be contracted to serve at the earliest possible date.
5. Agree upon all-star cast selection procedures. The purpose of this process is to identify the highest quality performances of individual actors. The number on the all-star cast should equal the size of the

average cast participating in that contest. Example: In a contest there are seven casts which include forty-nine actors, twenty-seven men and twenty-two women. The average size cast for this contest would be seven (49 ÷ 7): four men, three women. Thus, this all-star cast should include the best actress and best actor and should not exceed seven additional actors and actresses. The judge should be required to select a best actress and best actor. He should be given some freedom in choosing the other members of the all-star cast. He should not be required to select a fixed number of men and women but should be encouraged to choose only those who have given superior performances at that contest. If he desires, he should be allowed to select fewer than are on the "average size cast" described above. He should be encouraged to give honorable mention to as many other actors as the quality of their performances warrants. Under no circumstances should he be required to select actors described by such terms as "Best Supporting," "Best Character," or any others equally impossible to define or select fairly.

6. Finances: Recommend to the District Executive Committee a plan to finance the contest such as requiring each school to pay a contest entry fee, charge admission to performances, or a combination of both plans.
7. Promoting the contest: Discuss methods of securing district-wide participation in the contest, ways to improve the quality of production, and management of the contest.

All suggestions and recommendations should be sent to the District Director General and the District Executive Committee. They are the final authority in the organization and administration of all Spring Meet districts.

The Contest

Eligibility Notice: An Eligibility Notice is mailed from the State Office to each one-act play director who submitted a Title Entry Card. The Eligibility Notice is an important form serving to 1) certify the eligibility of the play selected by the school; 2) certify that participating students are eligible [See THE CONSTITUTION AND CONTEST RULES, Article VIII]; 3) describe stage properties required for the play; 4) provide program copy for the Contest Manager; and 5) indicate the length of performance for preparation of the contest schedule.

No play may be presented in contest unless the Eligibility Notice has been submitted to the district Director General. In the event the

Eligibility Notice is lost, call the State Office immediately so that another one can be issued.

Take with you: 1) Needed costumes, make-up, and sound effects as authorized by League rules; 2) only those set pieces, if any, specifically approved by the State Office and State Office written approval of such pieces; 3) all hand properties; 4) those stage properties not available at the contest site, provided prior permission has been granted by the Contest Manager; 5) evidence of royalty payment; 6) when applicable, publisher's approval to do a cutting of a long play.

Arrival at contest site: Upon your arrival at the theatre, advise the Contest Manager in order that he can give you information about the rehearsals and the contest.

Rehearsal time: The Contest Manager will allow as much time as possible to rehearse on the stage. [See Rule 3,b,1).] It is usually unnecessary to have a complete rehearsal, but you need time enough to become accustomed to the auditorium, lights, size of stage, etc. It is imperative that you observe time limits. Every cast deserves its full turn on the stage prior to the contest.

Conduct: You are specifically responsible for the conduct of your company. Instruct your students of the prime importance of courtesy and consideration for other visiting students, for the local crews, Contest Manager, and for the critic judge. Each company should be advised about the proper care of stage equipment, properties, and dressing rooms.

The Performance: Allow the host stage and prop crews time to set the stage before bringing your cast on stage. Be prepared to come to the stage for performance when called by the stage manager. After the performance, the cast should leave the stage immediately, and the crew should strike all hand props and costumes. Actors should remove all makeup and costumes before going into the house to see other plays.

Remember that your actors may not be prompted by anyone in the off-stage or backstage areas during the performance and that you will not be permitted in these areas during the performance of your show.

The Decision: Accepting the judge's decision requires graciousness on the part of the "winners" as well as the "losers." Receiving a first place award in the One-Act Play Contest is no reason for a riotous

demonstration. Applause is the acceptable method to pay tribute in the theatre. Your task as a director is to so instruct your students.

The Critique: The play contest is a creative, culturally enriching event, and the desire to improve by comparison is one of the principal reasons why students and directors participate. Thus, receiving the comments of thc critic judge becomes as definite a part of the contest as does the performance. To miss this educationally important aspect of play competition denies your company a benefit which it has earned and to which it is entitled. Failure to participate in the critique is often evidence of immaturity and bad sportmanship. You owe it to your company and to your own efforts to listen to what the judge may say; you have no right to offer an opinion contrary to his when you have not heard his full critique.

When You Win First Place

If your play is awarded first place in the zone, district, area, or regional contest, there are certain steps you must take immediately. You will be presented a winner's envelope by the Contest Manager (ask for it if he fails to give it to you). In the envelope will be another Eligibility Notice which you are to fill in completely and send to the Director-General of the next higher contest. Your principal will know the address if the Contest Manager does not have the information. The district winner's envelope will contain a duplicate Eligibility Notice that should be sent to the State Drama Director.

The items as described above apply equally to all other play contests. Plan thoroughly, prepare fully, and check carefully all items before a contest. This is a wonderfully worthwhile event in the lives of your company members.

One-Act Play Contest Rules

1. CONTEST ENTRY PROCEDURES
   a. *Representation.* Each member high school of the League is entitled to enter a play company in the district contest of its appropriate conference. If no more than two schools are represented in a district, each school may double its representation in the district play contest with the approval of the District Executive Committee.

b. *Student Eligibility.* Each member of a one-act play company shall be eligible under Article VIII of the *Constitution and Contest Rules.* Only students in high school are eligible for this contest.

c. *Enrollment.* Schools desiring to enter this contest must complete an entry form (mailed each year to all schools from the State Office), countersigned by the principal or superintendent, and return it to the State Office before the December 1 entry deadline.

d. *Qualification for Participation in a Higher Contest:*
   1) When there are eight or more schools participating in one-act play, the District Executive Committee may divide the District into two zones. There should be two winning plays selected at each of the zone contests.
   2) District winners qualifying for participation in regional contests may be assigned to area contests for the purpose of reducing the number of schools at the regional contest. Area contests will be held during the last week scheduled for district spring meets.
   3) The director of the winning company shall mail immediately to the Director General of the next higher one-act play contest and to the State Drama Director a properly completed Eligibility Notice.
   4) The State Executive Committee may merge or rearrange districts for the improvement of the contest.

e. *Faculty Director:*
   1) A director of one-act play must be a regular member of the faculty or a person formally designated as a director upon recommendation of the superintendent and approval of the school board.
   2) Directors may not accept nor solicit aid from college or university faculty members, ex-professional or professional actors, directors, designers, or costumers in the preparation of the play, or in coaching the actors, designing props, costumes, scenery, or in directing the contest play.

      (This provision is not intended to prevent directors from obtaining costumes from professional costume rental houses or from taking members of their companies to the several drama conferences and workshops conducted by the League and by numerous Texas high schools, colleges, and universities. Neither does it prevent use of a critic judge at a local intra-school contest so long as three or more casts participate in the contest.)

f. *Penalities for Failure to Participate in Contest:*
   1) Disqualification from the One-Act Play Contest for the current academic year will result if a school fails to meet the entry deadline or fails to meet the title entry deadline.
   2) Suspension from the One-Act Play Contest for the following year will result if a school fails to participate in the district One-Act Play Contest after making an official entry. Schools may file a written report to the State Executive Committee stating their reasons for withdrawal.

g. *Dates and Deadlines:*
   1) Request for Play Approval Deadline. All requests for permission to produce plays not on the Approved List of Long or Short Plays must be submitted, along with an exact copy of the play to the League Play Appraisal Committee, no later than February 14.
   2) Request for Additions to Set Deadline. All requests for additions to basic sets must be submitted, along with items a) through d) of Rule 2,b,5) no later than February 14.
   3) Title Entry Deadline. The title of the play selected for contest use must be submitted to the State Office no later than March 2.
   4) Zone, district, area, or regional play contests may be scheduled at times separate from other League contests.
   5) No deviations from nor exceptions to any official League deadline will be made.

2. CONTEST PLAY SELECTION AND ELIGIBILITY

a. *Title Selection.* All plays on the Approved Lists of Long and Short Plays may be used in League contests, but each must conform in all details to play contest regulations.
   1) Directors intending to select plays not on the approved lists must submit a copy of the script which clearly indicates the exact portions to be used and the names of the author and publisher to the State Office for approval prior to February 14. Such plays are approved only by individual request each year.

   (The League Play Appraisal Committee will not approve scripts from catalogues of play publishing companies that do not appear on the publishers list in this HANDBOOK. Directors are not required to submit cuttings of plays when the title appears on the Approved List of Long Plays. It should be noted, however, that the appearance of a title on the list does not constitute approval from the publisher or playwright to cut the play.)

2) Directors who request approval of plays not on the lists which may require additions to the basic set must submit, with the same request, all information and items called for in Rule 2,b,5). Approval of a script, whether on the lists or by special request, does not constitute approval of any additions to the basic set which may be described in the script.
3) Plays listed in this HANDBOOK as ineligible, or plays which are by nature musical or choral speaking or which are predominantly music or choral speaking, may not be selected for use in contests.
4) Plays may be selected which require incidental sound and music effects.
5) Plays used in contests must not offend the moral standards of the community nor be in bad taste, and directors will eliminate all cursing, profane references to the Diety, and immorally suggestive statements or scenes from the plays. Directors will revise or reject all scripts or material within approved plays which in any way fail to meet these requirements.

b. *Contest Play Eligibility.* The Contest Manager is required to declare ineligible any play which violates any one of the following rules. He shall notify the judge of such ineligibility before the judge makes his decision. No play which is declared ineligible by the Contest Manager may be included in final ranking nor be considered for any honors, and no member of the company of an ineligible play may be placed on all-star casts.
1) Eligibility Notice. No play may be performed unless the director can produce the Official Eligibility Notice that the title is duly approved and recorded by the State Office.
2) Royalty Receipt. The director must produce written evidence that the royalty payment has been paid, if royalty is required. If the director is producing scenes from a long play or an original play, he must produce written evidence that permission for production has been obtained from the publisher or auther unless the specific edition of the play being used is in public domain. The League assumes no responsibility for payment of royalties or obtaining permission from the publisher or author to produce plays or scenes from plays.
3) Number in Company. No play may be performed which uses more than ten individuals in the cast. Double casting, which allows one actor to play more than one role, is permissible. In addition to the cast, no more than three individuals may serve as crew members or alternates.

4) Time Limit. No play may exceed forty minutes in performance time. Length of playing time shall be determined by time elapsing from the opening curtain, or from the beginning of music or action in front of the curtain, to the closing curtain. Time for scene changes during the progress of the play shall be included in the forty-minute time limit.

   No director may use more than ten minutes to set and ten minutes to strike all sets, lights, properties, or sound effects for any contest production. Only sixty seconds is allowed to make a scene change during a performance. Either a blackout or closing a curtain may be used to indicate lapses of time, flashbacks, or scene changes. A timekeeper is responsible for recording these limits.

   In case of violation of the above time limits, the Contest Manager shall, after the final curtain of the play in question, immediately notify the director of the play and the critic judge that the play is ineligible.

5) Sets and Props. No play will be performed in contest which violates any of the following provisions concerning sets and props: The basic set shall be the one which is available at the contest site. The basic set to be used for all One-Act Play Contests may consist of a standard box set of draperies, or arrangements of wing and backdrop draperies, or a curtain cyclorama, with such standard stage door and window units as are necessary, or the League Approved Unit Set as described in the "Supplements" of this HANDBOOK.

   (Stage lighting equipment which is available at the contest site is considered a part of the basic set. The Contest Manager may borrow such additional stage lighting equipment as may be necessary so long as it is available to all play entries for both rehearsal and performance. Any other stage lighting equipment requires set addition approval.)

   If additions to the basic set, such as drops, special step units, platforms, scrim, set pieces, curtains, draperies, or flat scenery except as noted above, are desired, the director must submit to the State Office on or before February 14 each of the following:

   a) A scale drawing of the complete ground plan of the proposed set.
   b) A scale drawing or model rendered to scale of each proposed addition to the basic set.
   c) A full description of all materials to be used in construction of each proposed addition to the basic set.

d) A full description and justification of the intended use of each proposed addition to the basic set.

No consideration will be given to any request for additions to the basic set unless items a) through d) listed above are submitted. (Additions to the basic set do not include stage properties. Refer to the "Supplements" in this HANDBOOK for a definition of stage properties.) The letter from the State Office approving set additions must be presented by the director to the Contest Manager. Set additions not officially approved by the State Office cannot be used in One-Act Play Contests.

District, area, regional, and state One-Act Play Contest Managers will supply only standard stage properties. No stage properties such as those included in the definition (Refer to the "Supplements" in this HANDBOOK) will be used as substitutes for platforms or step units. Individual play directors may provide unusual stage properties not available at the contest site. Arrangements for the use of such properties must be made in advance with the Contest Manager. All hand properties must be furnished by individual play directors. (Refer to the "Supplements" in this HANDBOOK for a definition of hand properties.)

6) Firearms or Explosives. No real gun, rifle, or pistol may be used in any way, regardless of whether or not the firing pin is removed. Toy or wooden model firearms may be used. Discharge of a firearm, cap pistol, or any explosive in connection with a contest play is not permitted.
7) Prompting. No prompting of actors will be allowed during the performance by anyone off-stage or out of the acting area.
8) The Director During the Contest Performance. No director will be permitted in backstage or off-stage areas during the contest performance of his play, but directors are permitted in these areas during the set and strike periods.

3. CONTEST PLANNING PROCEDURES AND JUDGING

a. *Planning Meeting.* One-act play directors in each district are urged to hold a preliminary planning meeting in advance of the organizing date for district contests. (See the **Interscholastic League Calendar** in the CONSTITUTION AND CONTEST RULES.) Recommendations resulting from this meeting concerning site, judge selection, and other contest procedures may be made to the District Director General.

b. *Contest Procedures.* It is the responsibility of the One-Act Play Contest Manager, appointed by the District Director General, to organize and conduct the contest in accordance with League rules and the "Guide for Contest Managers" in this HANDBOOK.

1) Schedule. The order of performance will be determined by a drawing conducted by the Contest Manager. Adjustments in order of performance may be made to avoid conflict with other contests or for other reasons deemed valid by the Contest Manager.

The Contest Manager is required to establish rehearsal periods and a performance schedule, and directors shall be advised of these as soon as possible after they have been arranged. The schedule must permit each company a rehearsal period of not fewer than forty minutes on the stage of the contest site and with scenery, lights, and properties which the director will need and which have been approved for a performance of his play.

2) Timekeepers. The Contest Manager shall appoint responsible adults to serve as timekeepers who will record the beginning and closing times of each play, such blackouts and scene changes as may occur during a performance, and set and strike times. Under no circumstances will the judge or the Contest Manager serve as timekeeper.

c. *Judging*

1) Selection of Judges. All One-Act Play Contests shall be adjudicated only by judges selected from the League's Accredited List of Critic Judges, unless exception be approved by the State Office for valid reasons.

2) Types of Judging

a) Critic Judging. It is specifically recommended that one judge be used to adjudicate all One-Act Play Contests. He shall prepare a critique on each play and present it orally as advised by the Contest Manager. The critique will not be presented until after the Contest Manager has announced the results of the contest.

b) Panel Judging. This type of judging is specifically not recommended. If three or more judges must be used, the judges must sit apart during the contest. They must arrive at a decision without conferring with one another or any other person. If panel judging is used, the League Play Ranking Plan will be the only one used by the judges and tabulated by the Contest Manager in determining the results

of the contest. In keeping with the educational function of this contest, members of the panel will not be allowed to give an oral or written critique or otherwise evaluate the plays or contestants after the contest.

3) Responsibility for Selection of Judges. The judge for the zone or district contest will be selected by the District Executive Committee; judges for area and regional contests will be selected by the Contest Managers of these contests; and judges for the State Contest will be selected by the State Executive Committee.
4) Instruction to Judges. Before the contest begins, the Contest Manager will give to the judge or judges copies of the judging materials. The Contest Manager will fully explain them and other contest procedures insofar as they concern the judging, decisions, and the critique. The contest will not begin until the Contest Manager has performed this duty faithfully.
5) Decision of the Judge or Judges. The decision of the judge or judges is final.

GUIDE FOR THE ONE-ACT PLAY CONTEST CRITIC JUDGE

The Function of the Critic Judge

The most important function of the critic judge is to serve as an educator. True, he must select winners, but adjudication without a carefully prepared critique which teaches as it criticizes deprives play competition of a most valuable feature: opportunity for qualitative improvement.

An effective critique requires, among other things, extensive knowledge of all styles and types of drama, and an understanding of the physical theatre with special concern for limitations often imposed upon the stage house in school theatre plants. The successful judge must be able to discuss the plays he has seen in a firm but courteous manner. He must be objective, direct, and detailed in his criticism without imposing his opinions dictatorially.

The critic judge has the special responsibility of evaluating seriously the efforts of the director and his company, and of treating them and their performance with respect. They have deliberately engaged in creative competition which offers a wider variety of cultural and practical opportunities than other contests. Through many hours of rehearsal they have sought to perfect creative performances not only to win the contest, but for the satisfaction which comes through the search for perfection in the arts. To treat such effort casually would defeat a most important function of critic judging.

The critic judge should use his skills and experience to make each contest a pleasant and richly educational experience in the lives of young people as they seek to understand more fully the art of theatre.

Pre-Contest Judging Procedures

1. Determine from the Contest Manager the contest level (zone, district, area, or region) and the conference (B, A, AA, AAA, or AAAA) you are being asked to judge in order to prevent judging a contest in which winners you have previously judged will appear.
2. Request of your Contest Manager that he and all participating directors meet with you for about thirty minutes prior to the contest. The purpose of this meeting is to discuss the method of presenting your critique and other details about judging the contest.
3. Make definite arrangements with the Contest Manager about fees. Suggested minimums are $5 per play, ten cents per mile from your

home to the contest and return, meals, and lodging as required, not to exceed $17 per day.
4. Take with you all correspondence pertaining to the contest.
5. Arrive at the contest site in plenty of time to meet the Contest Manager and to inspect the theatre and the location of your judging position.
6. Arrange with the Contest Manager all details concerning the procedures to be followed at the conclusion of the last play.

Working Conditions for the Critic Judge

1. You must have an uninterrupted view of the stage as nearly in the center of the theatre as possible. You need a small table, or a lap board if you are sitting in a row. There should be no member of the audience seated within two seats of you in any direction.
2. There should be a low-wattage, shaded lamp available at your table or seat which you can turn on and off.
3. The Contest Manager has judging materials from the State Office which you will need. Request these if he forgets to give them to you before the contest.
4. Before the pre-contest meeting with the directors, request the Contest Manager to furnish you with a copy of the official contest program on which all names of directors and schools have been rendered illegible.

Standards for Judging One-Act Plays

These are the official standards for judging all Interscholastic League One-Act Play Contests. Please do not make any effort to use exact percentages as a method of ranking the plays, even though approximate percentage values are suggested for the two major areas.

1. Acting. Value: about 60%.
   a. Voice. Could you hear the actors distinctly? Was the rate too fast or too slow? Was there a variety of rate and inflection? Was pronunciation and articulation properly done for each character? If dialect was used, was it done correctly and naturally?
   b. Characterization. Was there a complete bodily and mental re-creation of the character by the actor? Were his reactions to other actors correct and effective? Did we "believe" the actor's characterization all the time he was on the stage?
   c. Movement. Were the movements of the actor in keeping with the character? Was there a great deal of random movement? Was the

pantomime accurate and convincing? Did the actor seem to have a well-controlled, poised body?

d. Contrast. Were there clearly contrasting moods in the dialogue? Were emotional transitions natural and effective? Were the lines delivered in a manner which seemed natural to the characters in this play?

e. Ensemble. Did you feel a smoothness of action which indicates adequate rehearsal and close cooperation and understanding among the actors? Was it a closely knit, rhythmically correct show?

f. Timing. Did the actors pick up cues properly? Did the movements of the actors slow down the tempo of the show? Was the production static in places because the actors seemed to lack a correct sense of pace?

g. Motivation. Was there a logical reason for all business and movement by the actors which was consistent and in keeping with the characters in the play?

2. Directing and Stage Mechanics. Value: about 40%.

a. Set. Within limitations of contest rules, did the set satisfactorily represent the idea of the play? Was the furniture used in a way which assisted but did not hinder the action?

b. Lighting. Did the lighting effects blend harmoniously and unobtrusively into the action of the play? Were there effects which were so obvious that they called attention to themselves and took your attention away from the action of the play? (The use of elaborate lighting effects will be disregarded by the judge; however, the play must not be discounted because lighting control or equipment were inadequate and resulted in faulty effects for which the director could not be responsible.)

c. Make-Up. Was the make-up natural and in keeping with each character?

d. Costume. Were the costumes for each character correct as to color, style, and period? (The use of elaborate costumes must not affect the final decision of the judge.)

e. Business. Were exits and entrances properly timed? Did the actors frequently cover or block each other? Was the business properly motivated? Was the designed business adequate to bring out the idea of the play?

f. Tempo. Did the play as a whole drag? Was it too fast to follow intelligently? Was the pace of the play in keeping with the general idea of the play? Was the tempo fast enough for farce? Did it tend to become slower for tragedy? Were the sub-climaxes and the climax well built up?

g. Composition. Were the actors grouped to give proper emphasis to the right characters at the right time?
h. Theme. Did the play strongly challenge the abilities of the actors? Was the main idea or theme of the play brought out clearly?

Selection of the All-Star Cast

Refer to item 5 of Planning Meetings and items 5 and 6 of Contest Procedures in the "Guide for Contest Managers."

Critique Problems for the Critic Judge

1. **You should:**
   a. Realize that, in addition to selecting winners, you were employed to be critically constructive. Help the director and actors with sound suggestions which they may use to improve their work.
   b. Give a critique of all plays, not only the first and second place winners, and try to devote equal time to each. (The winning play may require a longer critique. It may be given after others are presented.)
   c. Understand that most young actors try as hard as they know to be effective. Be tactful and kind as you comment about their mistakes.
   d. Recognize, in the all-star cast, actors from as many different companies as the quality of their performances will permit. Give honorable mention to the better actors whom you could not list on the all-star cast.
   e. Whenever possible find something about the performance which you can honestly commend.
   f. Be familiar with the rules concerning scenery and its use in order to prevent penalizing the director because of staging stiuations over which he had no control.
   g. Be specific in criticizing the performance and use examples from it. Discuss it in terms used in the Judging Standards. A vague, indecisive critique is clear evidence the judge is not well qualified.
   h. Request the Contest Manager to stop the contest if audience behavior makes it difficult for you to hear or concentrate on the performance.
   i. Keep your personal opinion of the playwright to yourself if you do not like his play. There is nothing in the Judging Standards which calls upon you to evaluate the playwright or his play.

j. Organize your notes in order that you may arrive at your decision and give your critique quickly. Long-windedness defeats much of the effectiveness of the critique.

k. Request of the Contest Manager the program of plays being performed, from which the names of directors and schools have been rendered illegible.

l. Know the zone, district, area, or region and conference in which you are judging.

2. **You should not:**

a. At any time comment adversely about the play. It has been officially approved by the League Play Appraisal Committee. It may not be the best play for a particular cast to produce at a particular contest, but the judge has no responsibility in this contest to be publicly critical of the director's choice of play.

b. Criticize only in a negative way. Try to be constructive. It is your duty to help the director and actor to improve their work.

c. Make a "performance" of your critique. You were employed to judge the contest, not to "act a role" before a captive audience.

d. Compare the performance of one cast with another. Instead, show the cast how they did or did not measure up to the Official Standards.

e. Announce the winners, distribute the trophies, serve as the timekeeper, perform any of the tasks of the Contest Manager, or become involved in interpreting the rules of the Contest. You have only two responsibilities: Select the winners and present an instructive oral critique.

f. Re-direct the winning play. Suggestions are always in order, but let the director interpret them for his company and use them as he sees fit.

g. Embarrass the director before his company by sarcasm, ridicule, or remarks which in any way belittle him or his company.

h. Make any of the following remarks or similar remarks which may have the same effect:

"I didn't like your play."

"I would have done it this way."

"I don't believe high school students should play such roles."

"I am so tired of seeing that play."

"You would have won the contest (or placed second, or placed third, or your boy would have won best actor, etc.) had your play not been disqualified."

"You should have tried a newer play. This one has been done so often."

"What can you expect with a play by that author?"

"This is my favorite play."

i. Serve as a member of a judging panel. [See Rule 3,c,1),b), Panel Judging.]

j. Become involved in a dispute about your decision. Read all the rules, instructions, and the Judging Standards carefully. Be sure your decision is a right one before you render it, and refuse to discuss it with directors, students, parents, or Contest Managers. You made it, it is final and can not be changed once it is officially announced.

k. Under any circumstances give play directors your work sheets or notes. If you care to provide a written critique, do so only after you have had time to carefully consider the written commentary and how it might be interpreted.

l. Agree to judge a zone, district, or area contest if you have contracted to judge the regional contest in which winners you have previously judged will appear.

GUIDE FOR ONE-ACT PLAY CONTEST MANAGERS

Pre-Contest Planning

1. Read carefully the One-Act Play Contest rules in the current League CONSTITUTION AND CONTEST RULES and this HANDBOOK.
2. As soon as possible after accepting your appointment, check to determine if a planning meeting for all district play directors was held. If none was held, refer to Planning Meetings in the "Guide for the One-Act Play Director" of this HANDBOOK for a recommended agenda.
3. Upon receipt of all Eligibility Notices from the District Director General:
   a. Draw for order of performance at the contest.
   b. Determine scenery and property needs. (Properties as defined in "Supplements" of this HANDBOOK cannot be used as substitutes for step units or platforms.) It is recommended that a League-Approved Unit Set be provided. (Only one Unit Set is allowed at each contest.)
   c. Advise each director of the results of the drawing, stage properties available at the contest site and those he should bring to the contest, and information about the rehearsal schedule. (You are required to arrange sufficient time and space for rehearsal.)
4. Request your District Director General to send your package of contest materials: Report and judging forms, winner's envelope, etc.
5. Reserve the theatre and necessary auxiliary rooms for dressing, make-up, etc., which will be used during rehearsal periods and the contest.
6. Secure a publicity chairman, doormen, ushers, box office personnel, two adult timekeepers, and backstage crews.
7. Prepare program copy and have it printed. Prepare a copy for the critic judge upon which the names of schools and directors have been rendered illegible.

Contest Procedures

1. Arrange to have backstage crews, doormen, ushers, box office personnel, and timekeepers ready to work at the times their duties require.
2. Meet, or have an assistant meet, each director and his company as they arrive. Show him his dressing rooms and places for make-up, scene, costume, and prop storage.

3. As soon after his arrival as possible consult each director about:
   a. Confirmation of royalty payment for performance of the play at this contest.
   b. Basic set additions. (If a director brings additions to the basic set which are not approved in writing by the State Office, you must warn that such additions may not be used. Should unapproved additions be used, you must declare the play ineligible to be ranked or critiqued. This applies also to directors of contest plays who serve as Contest Managers in their own theatres. In case of question, call Drama Director, State Office.)
   c. Time assigned for rehearsal of actors, lights, setting, and strike of scenery and props. (See Rule 2, b, 4, for time limits)
   d. Time of the pre-contest meeting with the critic judge about all-star cast selection, methods of critique, etc.
4. Arrange adequate working space in the theatre for the critic judge.
   a. Locate the space so the judge will have an uninterrupted view of the stage and be near enough to permit him to hear actors clearly.
   b. Provide a small table or lap board equipped with a low-wattage light.
   c. Rope off an area around the judge's space; this will permit no one to sit within two seats of him in any direction.
5. Meet the critic judge upon his arrival at the contest site; show him his working space; assure yourself he is completely familiar with the official judging standards, selection of all-star cast (see Planning Meetings, item 5), and other League One-Act Play Contest procedures; and give him a copy of the program upon which names of directors and schools have been rendered illegible.
6. Meet all directors and the critic judge at least thirty minutes prior to the contest. Allow the judge sufficient time to discuss selection of the all-star cast, method of conducting critique, etc. This is a good time to make last minute announcements and answer any questions directors may have. Urge all directors to request that companies remain for the entire critique.
7. The contest.
   a. Start the contest on time.
   b. Make announcements to the audience concerning this contest, its value and the manner of conducting it. If titles of plays are announced, do not mention names of directors or schools represented.
   c. Play the shows "back to back" using only such time as is actually needed to set and strike, but not more time than is permitted by the rules on this subject.

d. If any director violates any provision of Rule 2, you must declare the play ineligible to be ranked or critiqued and notify the director and judge immediately after the curtain falls on the performance of the play in question.

8. At the conclusion of the contest:
   a. Escort the judge to a private room or office where he may prepare his decision.
   b. As soon as the decision is reached, announce the results, and present awards.
   c. Introduce the critic judge, again urge all directors and their companies to remain, and turn the the contest over to the judge for his critique.
   d. After the judge concludes his critique, pay him. (See the "Guide For the One-Act Play Contest Critic Judge" for recommendations.)
   e. Send the Contest Manager's report to the State Office immediately.
   f. Send results of the contest to the Director General of the next higher contest.
   g. Write the Director of Drama, State Office, if you have suggestions to improve the One-Act Play Contest.

SUPPLEMENTS

Play Selection Policy of the Texas Educational Theatre Association

In keeping with its avowed purpose of encouraging production of high-quality plays, the Texas Educational Theatre Association announces adoption of the following recommendations concerning the selection of plays for use by educational theatres in Texas:

1. All public school and college theatres are urged to select and produce only high quality plays, whether published or unpublished.

2. As a rule, Association endorsement of any play publisher is subject to the following qualifications:
   a. No long non-royalty, $5, $10, or $15 royalty plays of any publisher will be endorsed, except classics upon which royalty payments are no longer required. (This provision is not intended to discourage individual negotiations which may result in legitimate reduction of royalty payments for plays normally requiring fees in excess of $15.)
   b. No short (one-act) non-royalty plays of any publisher will be endorsed, except classics upon which royalty payments are no longer required.
   c. No plays are endorsed upon which royalty payments are waived when a certain number of scripts are purchased, or upon which unusual royalty payment arrangements are advertised or permitted.

3. Of the play publishing companies studied to date, the Association endorses the following, subject to the qualifications set forth above:
   a. Anchorage Press, Cloverlot, Anchorage, Ky. 40223
   b. Baker's Plays, 100 Summer Street, Boston, Mass., 02110
   c. Coach House Press, 53 West Jackson Blvd., Chicago, Ill. 60604
   d. Dramatic Publishing Co., 86 East Randolph Street, Chicago, Ill. 60601
   e. Dramatists Play Service, Inc., 440 Park Avenue South, New York, N.Y. 10016
   f. David McKay, 750 Third Avenue, New York, N.Y. 10017
   g. Samuel French, Inc., 25 West 45th Street, New York, N.Y., 10036
   h. Stage Magic, Box 246, Schulenburg, Texas 78956

The Play Selection Policy of the Texas Educational Theatre Association is endorsed by the Drama Department of the University Interscholastic League. The Policy is used as a guide by the League Play Appraisal Committee when considering new plays to add to the Approved Lists or when considering play requests from directors.

An Approved List of Short Plays for Contest

The following plays are approved provided they comply fully with Rule 2. Elimination of all cursing, profane references to the Deity, and immorally suggestive statements or scenes is required. These plays must also meet all other requirements of the One-Act Play Rules.

Title, Author, Publisher	*Type*	*Royalty*	*Cast*
Act of Grace, Mary Neild, Baker	Drama	$10	4W
Affected Young Ladies, The, Moliere, French	Comedy	Non-R	6M-3W
Afterwards, Geraldine McGaughan, French	Drama	$5	3M-1W
American Family, An, Fred Eastman, French	Drama	$5	4M-4W
Anastasia (Recognition Scene), Marcelle Maurette, French	Drama	$10	2W
And Silently Steal Away, Patterson and Mitchell, French	Comedy	$5	2M-3W
Angels Don't Marry, Ryerson and Clements, French	Comedy	$5	1M-2W
Antic Spring, Robert Nail, French	Comedy	$5	3M-3W
Apollo of Bellac, The, Jean Giraudoux, French	Comedy	$25	9M-3W*
Aria Da Capo, Edna St. Vincent Millay, French	Drama	$15	4M-1W
As You Like It, Shakespeare, Stage Magic	Comedy	$10	6M-4W
Bald Soprano, The, Eugene Ionesco, French	Comedy	$15	3M-3W
Barber of Seville, The, Beaumarchais, Stage Magic	Comedy	$10	6M-4W
Battle of Wits, A, Norman Williams, French	Drama	$5	5M-2W
Bauble for Baby, A, E. P. Conkle, French	Comedy	$5	1M-3W
Bishop's Candlesticks, The, Norman McKinnel, French	Drama	$5	3M-2W
Boor, The, Anton Chekhov, French	Comedy	Non-R	2M-1W
Box and Cox, John Morton, French	Comedy	Non-R	2M-1W
Brilliant Performance, Marjorie Allen, French	Comedy	$5	4W
Browning Version, The, Terrence Rattigan, French	Drama	$20	5M-2W
Brute, The, Anton Chekhov, French	Comedy	$5	2M-1W
Bumbo the Clown, Lawrence Gibson, French	Comedy	$5	3M-1W
Cabbages, Edward Staadt, French	Comedy	$5	3M-4W
Cain, A Mystery, Lord Byron, Stage Magic	Drama	$10	6M-3W
Call Me Mac, Theodore St. John Cox, Baker	Drama	$5	4M-2W
Canterbury Tale From The Wife of Bath, Herman Ammann, Stage Magic	Comedy	$10	5M-7W*
Case of the Crushed Petunias, Tennessee Williams, Dram. Play Serv.	Comedy	$10	2M-2W
Chairs, The, Eugene Ionesco, French	Drama	$15	2M-1W
Childhood, Thorton Wilder, French	Comedy	$15-10	2M-3W
China-Handled Knife, A, E. P. Conkle, French	Comedy	$5	6M-4W

Title, Author, Publisher	*Type*	*Royalty*	*Cast*
Christmas Dream, The, I. E. Clark, Stage Magic	Drama	$10-$5	3M-3W
Circumstances Alter Cases, Ruth Giorloff, French	Comedy	$5	2M-3W
Clod, The, Lewis Beach, French	Drama	$10	4M-1W
Columbine Madonna, Glenn Hughes, Baker	Comedy	$5	4M-1W
Courting of Marie Jenvrin, The, Gwen Pharis Ringwood, French	Comedy	$5	5M-2W
Court Martial of Buddy Budd, The, James Salem, Dram. Pub. Co.	Drama	$10-$7.50	11M*
Cyrano de Bergerac, Edmond Rostand, Stage Magic	Drama	$10	5M-5W
Dancers, The, Horton Foote, Dram. Play Serv.	Drama	$15	3M-7W
Dark Brown, Philip Johnson, French	Drama	$5	2M-5W
Dawn Will Come, David Weinstock, French	Drama	$5	5M
Day of Atonement, Margaret Wood, French	Drama	$5	3M-1W
Dear Departed, The, Stanley Houghton, French	Comedy	$5	3M-3W
Death of The Hired Man, The, J. Reid Gould, Dram. Pub. Co.	Drama	$15-$7.50	2M-2W
Devil and Daniel Webster, The, Stephen Vincent Benet, Dram. Play Serv.	Comedy	$5	6M-1W
Devil on Stilts, Ryerson and Clements, French	Comedy	$5	3W
Devil's Cuspidor, The, Beatrice La Force, McKay	Comedy	$10-$5	2M-3W
Doctor Nostradamus, Roma Greth, Coach House Press	Drama	$10	2M-2W
Double Date, Florence Ryerson, French	Comedy	$5	3M-4W
Drums of Oude, The, Austin Strong, French	Drama	$10	7M-1W
Dust of the Road, Kenneth Goodman, Baker	Drama	Non-R	3M-1W
Elizabeth Refuses, Margaret Macnamara, Baker	Comedy	$5	1M-4W
Enemies, Arkady Leokum, French	Drama	$10	2M
Eternal Life, Fred Eastman, French	Drama	$5	3M-3W
Even the Hater, Albert Johnson, French	Drama	$10	2M-1W
Everyman, Anonymous, Various Publishers	Drama	Non-R	11M-6W*
Farce of the Worthy Master Pierre Patelin, The, Moritz Jagendorf, Baker	Comedy	$5	4M-1W
Feather Top, Maurice Valency, Dram. Play Serv.	Comedy	$10	7M-3W
Ferryboat, Anne M. Barlow, Dram. Play Serv.	Drama	Apply	1W-1M
Five in Judgment, Douglas Taylor, Dram. Play Serv.	Drama	$10	7M-1W
Fixin's, Paul and Erma Green, French	Drama	$5	2M-1W
Flattering Word, The, George Kelly, French	Comedy	$10	2M-3W
Florist Shop, The, Winifred Hawkridge, Baker	Comedy	$10	3M-2W
Footfalls, Brainerd Duffield, Dram. Pub. Co.	Drama	$10-$7.50	7M-4W*
Friends, Arkady Leokum, French	Comedy	$10	3M
Frogs, The, Aristophanes, Stage Magic	Comedy	$10	8M-4W*
Game of Chess, The, Kenneth Goodman, French	Drama	$10-$5	4M
Gammer Gurton's Needle, Mr. S. Master of Arts, Stage Magic	Comedy	$10	6M-4W
Gift of Tenyin, The, John Tumpane, Dram. Pub. Co.	Comedy	$5	2M-6W

Title, Author, Publisher	*Type*	*Royalty*	*Cast*
Good-Bye to the Clown, Ernest Kinoy, French	Comedy	$5	3M-3W
Gondoliers, The, Gilbert and Sullivan, Stage Magic	Comedy	$10	5M-5W
Grand Cham's Diamond, Allan Monkhouse, Baker	Comedy	$5	3M-2W
Granny's Little Cheery Room, E. P. Conkle, French	Comedy	$5	1M-3W
Grate Hero, The, Cleve Haubold, French	Comedy	$5	4M-3W
Happy Journey to Camden and Trenton, The Thorton Wilder, French	Comedy	$10	3M-3W
Happy Scarecrow, The, I. E. Clark, Stage Magic	Comedy	$10	7M-4W*
Have A Heart, Ron Bourgea, Stage Magic	Comedy	$5	5M-5W
Heritage of Wimpole Street, The, Robert Knipe, Baker	Drama	$5	2M-3W
Hooray for Adam Spelvin: He is Perfect, Cleve Haubold, French	Comedy	$5	2M-4W
'Ile, Eugene O'Neill, Dram. Play Serv.	Drama	$10	5M-1W
I'm a Fool, Christopher Sergel, Dram. Pub. Co.	Comedy	$10-$7.50	4M-4W
I Married Irene, Joseph Baldwin, French	Comedy	$5	2M-2W
Importance of Being Earnest, The, Oscar Wilde, Various	Comedy	Apply	5M-4W
Impromptu, Tad Mosel, Dram. Play Ser.	Drama	$10	2M-2W
Inexperienced Ghost, The, Markland Taylor, Dram. Pub. Co.	Comedy	$10-$7.50	4M-3W
Informer, The, John McGreevey, Dram. Pub. Co.	Comedy	$10-$7.50	5M-3W
In the Shadow of the Glen, J. M. Synge, French	Drama	$10	3M-1W
Infancy, Thorton Wilder, French	Comedy	$15-$10	2M-3W
John Doe, Bernard V. Dryer, Baker	Drama	$5	6M-1W
Joint Owners in Spain, Alice Brown, Baker	Comedy	$5	4W
Just Another Day, Arthur Lovegrove, French	Comedy	$5	1M-4W
Kitten in the Elm Tree, E. P. Conkle, French	Comedy	$5	3M-3W
Korczak and the Children, Erwin Sylvanus, French	Drama	$15	2M-2W
Ladies Alone, Ryerson and Clements, French	Comedy	$5	3W
Last of the Papier-Mache Cupids, The, Cleve Haubold, French	Comedy	$5	6M-4W
Lawyer of Springfield, The, Ronald Gow, Baker	Comedy	$5	7M-1W
Lesson, The, Eugene Ionesco, French	Drama	$15	1M-3W
Little Match Girl, The, Herman Ammann, Stage Magic	Drama	$10-$5	8M-12W*
Long Christmas Dinner, The, Thorton Wilder, French	Comedy	$10	5M-7W*
Lovers In Midsummer, The, Luella McMahon, Dram. Pub. Co.	Comedy	$10-$7.50	5M-4W
Macbeth, Shakespeare, Stage Magic	Drama	$10	10M-4W*
*Make Mine Vanilla!,*Ruth Angell Purkey, Baker	Comedy	$5	4M-1W
Maker of Dreams, The, Oliphant Down, French	Comedy	$8	2M-1W
Man in the Bowler Hat, The, A.A. Milne, French	Comedy	$10	4M-1W
Mannequins' Demise, David Wolf Budbill, French	Drama	$15	4M-2W
Marriage of Figaro, The, Beaumarchais, Stage Magic	Comedy	$10	6M-4W

Title, Author, Publisher	*Type*	*Royalty*	*Cast*
Marriage Proposal, The, Anton Chekhov, French	Comedy	Non-R	2M-1W
Married at Sunrise, John Kirkpatrick, French	Comedy	$5	2M-4W
Mice Have Been Drinking Again, The, Cleve Haubold, French	Comedy	$10	2M-2W
Mimsy Where the Borogoves, Charles G. Taylor, Drama Pub. Co.	Drama	$10-7.50	2M-3W
Minnie Field, E. P. Conkle, French	Comedy	$5	5M
Minuet, A, Louis Parker, French	Drama	$10	2M-1W
Mooncalf Mugford, Duffield and Leary, Dram. Pub. Co.	Drama	$10-$7.50	2M-3W
Moonshine, Arthur Hopkins, French	Comedy	$5	2M
Mother's Day, J. J. Priestley, French	Comedy	$5	2M-3W
Mr. Flannery's Ocean, Lewis John Carlino, Dram. Play Ser.	Drama	$10	3M-5W
Much Ado About John's Other Wife, Florence H. Morris, Coach House Press	Comedy	$10	8W
My Last Duchess, H. K. Bannerman, Dram. Pub. Co.	Drama	$5	3M-2W
Narrenschneiden, The, Hans Sachs, Stage Magic	Comedy	$10	2M-1W
Necklace, The, Jay R. Gould, Dram. Pub. Co.	Drama	$10-7.50	1M-3W
Neighbors, The, Zona Gale, Baker	Comedy	$10	2M-6W
Nine Lives of Emily, The, John Kirkpatrick, French	Comedy	$5	3M-4W
No 'Count Boy, The, Paul Green, French	Comedy	$5	2M-2W
Noble Lord, The, Percival Wilde, Baker	Comedy	$10	2M-1W
Not in the Contract, Nina Warner Hooke, French	Comedy	$5	4W
Now that April's Here, James Reach, French	Comedy	$5	2M-4W
Occurrence at Owl Creek Bridge, An, Christopher Sergel, Dram. Pub. Co.	Drama	$10-$7.50	4M-3W
Of Poems, Youth, and Spring, John Logan, French	Comedy	$5	4M-5W
Old Lady Shows Her Medals, The, J. M. Barrie, French	Comedy	$10	2M-4W
Once Upon a Playground, Jack Frakes, French	Comedy	$5	2M-8W
One Day in the Life of Ivan Denisovich, Robert Brome, Dram. Pub. Co.	Drama	$15-$10	11M*
Orphans, The, Nancy Camche, French	Drama	$5	3M-3W
Outcasts of Poker Flat, The, Perry Edwards, Dram. Pub. Co.	Drama	$10-$7.50	4M-3W
Over the Teacups, Percival Wilde, Baker	Comedy	$10	4W
Overtones, Alice Gerstenberg, McKay	Comedy	$10-$5	4W
Pandora and the Magic Box, I. E. Clark, Stage Magic	Drama	$10	11M-4W*
Part-Time Job, Laura Hornickel, French	Comedy	$5	1M-4W
Passing of An Actor, Williard Simms, Dram. Play Serv.	Comedy	$15	3M-1W
Patchwork Quilt, The, Rachel Field, French	Comedy	$5	2M-2W
Patterns, Anne C. Martens, Dram. Pub. Co.	Drama	$10-$7.50	2M-2W
Pearls, Dan Totheroh, French	Comedy	$5	2M-2W

Title, Author, Publisher	*Type*	*Royalty*	*Cast*
Phaedra, Jean Racine, Stage Magic	Drama	$10	3M-5W
Piece of Steak, A, Edward Darby, Dram Pub. Co.	Drama	$10-$7.50	5M-3W
Pink Lemonade for Tomorrow, Ruth Angell Purkey, Baker	Drama	$5	2M-2W
Pioneers, Mabel B. Gilmer, Baker	Drama	$5	3M-2W
Pit'chur Win'der, Grady Hausenfluck, The University of Texas Drama Dept.	Comedy	$5	3M-2W
Pot Boiler, The, Alice Gerstenberg, McKay	Comedy	$10-$5	5M-2W
Princess Marries the Page, The, Edna St. Vincent Millay, Baker	Comedy	$10	6M-1W
Psalm of Thanksgiving, A, Katherine Kester, French	Drama	$5	2M-2W
Purple Doorknob, The, Walter Eaton, French	Comedy	$5	3W
Queens of France, Thorton Wilder, French	Comedy	$10	1M-3W
Quiet, Please, Howard Bauermann, Dram. Play Serv.	Comedy	$5	3M-4W
Ralph Roister Doister, Nicholas Udall, Stage Magic	Comedy	$10	4M-6W
Red Heels and Roses, Patricia Clapp, McKay	Comedy	$10-$5	2M-3W
Rehearsal, Christopher Morley, McKay	Comedy	$10-$5	6W
Riders to the Sea, John Millington Synge, Baker	Drama	$10	3M-3W
Rise and Shine, Elda Cadogan, Baker	Comedy	$5	2M-2W
Robe of the Galilean, The, John McGreevey, Dram. Pub. Co.	Drama	$10	5M-5W
Rocking Horse Winner, The, Clark Fuller, Dram. Pub. Co.	Drama	$10-$7.50	5M-4W
Rose of Sharon, The, Frank R. Harland, The University of Texas Drama Dept.	Comedy	$10	2M-2W
Saben Revisited, Tom Jones, French	Drama	$5	3M-5W
Sandbox, The, Edward Albee, Dram. Play Ser.	Drama	$10	3M-2W
School for Husbands, The, Moliere, Stage Magic	Comedy	$10	7M-3W
Second Best Bed, Tim Kelly, Dram. Play Ser.	Comedy	Apply	8W
Secret Sharer, The, C. R. Wobbe, Dram. Pub. Co.	Drama	$15-$10	6M
Seeds of Suspicion, John McGreevey, Dram. Pub. Co.	Drama	$10-$7.50	4M-4W
Shadow of a Dream, Roland Fernand, Dram. Pub. Co.	Drama	$5	2M-3W
Sham, Frank G. Tomkins, Baker	Comedy	$5	3M-1W
She Stoops to Conquer, Oliver Goldsmith, Various Pub.	Comedy	Apply	6M-3W
Sheriff, The, James W. Arnold, French	Drama	$5	6M-1W
Shiny Red Ball, The, Cleve Haubold, French	Comedy	$5	2M
Short Walk After Dinner, A, Cleve Haubold, French	Drama	$5	1M-2W
Shut and Bar the Door, Tom Gray, Baker	Comedy	$5	4M-2W
Sisters McIntosh, The, Richard Corson, French	Comedy	$5	1M-2W
Six Who Pass While the Lentils Boil, Stuart Walker, French	Comedy	$10	9M-2W*
Slave with Two Faces, The, Mary C. Davis, French	Drama	$5	1M-2W

Title, Author, Publisher	*Type*	*Royalty*	*Cast*
Small Town Girl, Glenn Hughes, Baker	Comedy	$5	3M-3W
Sparkin', E. P. Conkle, French	Comedy	$5	1M-3W
Spreading the News, Lady Gregory, French	Comedy	Non-R	7M-3W
Spring Scene, Babette Hughes, Baker	Comedy	$5	2M-2W
Steinway Grand, Ferenc Karinthy, French	Drama	$10	1M-1W
Still Stands the House, Gwen P. Ringwood, French	Drama	$5	2M-2W
Stop for a Love Scene, John Kirkpatrick, French	Comedy	$5	3M-2W
Storm is Breaking, A, Jim Damico, French	Drama	$5	2M-1W
Summer People, The, Brainerd Duffield, Dram. Pub. Co.	Drama	$15-$10	4M-3W
Summons of Sariel, The, Magdelene Kessie, Dram. Pub. Co.	Drama	$5	9W
Sunday Costs Five Pesos, Josephina Niggli, French	Comedy	$5	1M-4W
Sunny Morning, A, Serafin and Joaquin Alvarez Quintero, French	Comedy	$10	2M-2W
Suppressed Desires, Susan Glaspell, Baker	Comedy	$10	1M-2W
Taming of the Shrew, The, Shakespeare, Dram. Pub. Co.	Comedy	$10-$7.50	5M-3W
Tangled Web, The, Charles Stevens, McKay	Comedy	$10-$5	2M-2W
Terrible Meek, The, Charles Kenedy, French	Drama	Non-R	2M-1W
They're None of Them Perfect, Sophie Kerr, French	Comedy	$5	6W
Third Grave Digger, The, Cleve Haubold, Baker	Comedy	$5	1M-3W
This Property Is Condemned, Tennessee Williams, Dram. Play Serv.	Drama	$10	1M-1W
This Way to Heaven, Douglass Parkhirst, French	Comedy	$5	2M-2W
Three Pills in a Bottle, Rachel Field, French	Comedy	$5	4M-4W
Thursday Evening, Christopher Morley, McKay	Comedy	$10-$5	1M-3W
Ticket to the City, A, Donald Elser, French	Drama	$5	4M-3W
Tiger Lily, Charles Emery, French	Drama	$5	3M-2W
Tooth or Shave, Josephina Niggli, French	Comedy	$5	2M-2W
Trifles, Susan Glaspell, Baker	Drama	$10	3M-2W
Trysting Place, The, Booth Tarkington, Baker	Comedy	$10	4M-3W
Twelve-Pound Look, The, J. M. Barrie, French	Drama	$10	2M-2W
Two Bottles of Relish, Edward Darby, Dram. Pub. Co.	Comedy	$10	2M-2W
Two Crooks and a Lady, Eugene Pillot, French	Drama	$10	3M-3W
Two Fools Who Gained a Measure of Wisdom, Tim Kelly, Dram. Play Serv.	Comedy	$10	1M-3W
Ugly Duckling, The, A.A. Milne, French	Comedy	$5	4M-3W
Ultimate Weapon, The, Anne Walters, Coach House Press	Drama	$10	2M-2W
Up The Rent, Tim Kelly, Dram. Pub. Co.	Comedy	$10-$7.50	3M-6W
Wait for Morning, Child, Grover Lewis, French	Drama	$5	2M-1W
Welcoming, The, Mary Bill, French	Comedy	$5	10W
What Never Dies, Percival Wilde, Baker	Drama	$10	1M-3W
When Altars Burn, Kay Arthur, French	Drama	$5	4W
When the Fire Dies, Ramona Maher, French	Drama	$5	1M-4W
When the Whirlwind Blows, Essex Dane, Baker	Drama	$5	3W

Title, Author, Publisher	*Type*	*Royalty*	*Cast*
Where But in America? Oscar Wolff, Baker	Comedy	$5	1M-2W
Where the Cross Is Made, Eugene O'Neill, Dram. Play Ser.	Drama	$10	6M-1W
Will-o'-the-Wisp, Doris Hallman, Baker	Drama	$5	4W
Woman's Privilege, A, Marrijane and Joseph Hayes, French	Comedy	$5	2M-2W
Wonder Hat, The, Hecht and Goodman, French	Comedy	$10	3M-2W
Woodshed, The, L.E. Preston, Baker	Drama	$5	3M-3W
Workhouse Ward, The, Lady Gregory, French	Comedy	$5	2M-1W
World of Sholom Aleichem, The, Arnold Perl, Dram. Play Service			
A Tale of Chelm	Comedy	$10	5M-3W
Bontche Schweig	Comedy	$15	7M-4W*
The High School	Drama	$25	7M-3W
Write Me a Love Scene, Ryerson and Clements, French	Comedy	$5	2M-2W
Yes Means No, Howard E. Rogers, Dram. Play Serv.	Comedy	$5	3M-2W
Young Lady of Property, A, Horton Hoote, Dram. Play Serv.	Drama	$15	3M-6W

*Double casting necessary. [Refer to Rule 2, b, 3), of this HANDBOOK.]

An Approved List of Long Plays for Contest

Cuttings or scenes from the following plays will be approved provided directors receive written permission from the publisher or author to cut all copyrighted material. All cuttings must comply fully with Rule 2, of this HANDBOOK. Directors will eliminate all cursing, profane references to the Diety, and immorally suggestive statements or scenes from the plays. These plays must meet all requirements of the one-act play rules.

Title	*Author*	*Publisher*
Adventures of Tom Sawyer, The	Various Dramatizations	Various Publishers
Aesop's Falables	Ed Graczyck	Anchorage Press
After the Fall	Arthur Miller	Dram. Play Serv.*
Aladdin and the Wonderful Lamp	Various Dramatizations	Various Publishers
Alchemist, The	Ben Jonson	Various Publishers
Ali Baba and the Forty Thieves	Wadeeha Atiyeh	Anchorage Press
Alice in Wonderland	Various Dramatizations	Various Publishers
All My Sons	Arthur Miller	Dram. Play Serv.
Anastasia	Marcelle Maurette	French

*In most cases, Dramatist Play Service WILL NOT allow "cuttings" of their plays. They will usually allow a scene, act, or group of scenes more or less in play sequence, preserving continuity. Write all publishers concerning "cuttings" or scenes before you attempt to cut copyrighted material or submit your Title Entry Card.

Title	*Author*	*Publisher*
Androcles and the Lion	Aurand Harris	Anchorage Press
Androcles and the Lion	G. B. Shaw	Various Publishers
Angel Street	Patrick Hamilton	French
Anne of the Thousand Days	Maxwell Anderson	Dram. Play Serv.
Antigone	Jean Anoulih	French
Antigone	Sophocles	Various Publishers
Arms and the Man	G. B. Shaw	French
As You Like It	Shakespeare	Various Publishers
Barber of Seville, The	Beaumarchais	Various Publishers
Barretts of Wimpole Street, The	Rudolph Besier	Dram. Play Serv.
Becket	Jean Anouilh	French
Big Klaus and Little Klaus	Hans Christian Anderson	Anchorage Press
Blood Wedding	Federico Garcia Lorca	French
Boy With a Cart, The	Christopher Fry	Baker
Brave Little Tailor, The	Aurand Harris	Anchorage Press
Bus Stop	William Inge	Dram. Play Serv.
Caesar and Cleopatra	G. B. Shaw	Various Publishers
Caucasian Chalk Circle, The	Bertolt Brecht	French
Cave Dwellers, The	William Saroyan	French
Chalk Garden, The	Enid Bagnold	French
Cinderella	Various Dramatizations	Various Publishers
Comedy of Errors, The	Shakespeare	Various Publishers
Company of Wayward Saints, A	George Herman	French
Corn is Green, The	Emlyn Williams	Dram. Play Serv.
Cradle Song	John Garrett Underhill	French
Craig's Wife	George Kelly	French
Cricket on the Hearth, The	Marian Jonson	Coach House Press
Crucible, The	Arthur Miller	Dram. Play Serv.
Cyrano de Bergerac	Edmond Rostand	Various Publishers
Crying Princess and the Golden Goose, The	Hans Josep Schmidt	Coach House Press
Dancing Donkey, The	Erik Vos	Anchorage Press
Dark of the Moon	Harold Richardson and William Berney	French
David and Lisa	James Reach	French
Dear Brutus	J. M. Barrie	French
Diary of Anne Frank, The	Frances Goodrich and Albert Hackett	Dram. Play Serv.
Dinny and the Witches	William Gibson	Dram. Play Serv.
Dino	Kristin Sergel	Dram. Pub. Co.
Doctor in Spite of Himself, The	Moliere	Various Publishers
Don Quixote of La Mancha	Arthur Fauquez	Anchorage Press
Electra	Sophocles	Various Publishers
Elizabeth the Queen	Maxwell Anderson	French
Emperor's New Clothes, The	Charlotte Chorpenning	French
Eumenides, The	Aeschylus	Various Publishers
Exit the King	Eugene Ionesco	French

Title	*Author*	*Publisher*
Family Portrait	Lenore Coffee and William J. Cowen	French
Gammer Gurton's Needle	Mr. S. Master of Arts	Various Publishers
Ghost of Mr. Penny, The	Rosemary Musil	Anchorage Press
Glass Menagerie, The	Tennessee Williams	Dram. Play Serv.
Golden Boy	Clifford Odets	Dram. Play Serv.
Great Catherine, The	G. B. Shaw	French
Great Cross-Country Race	Alan Broadhurst	Anchorage Press
Green Grow the Lilacs	Lynn Riggs	French
Greensleeves' Magic	Marian Jonson	Coach House Press
Hansel and Gretel	Various Dramatizations	Various Publishers
Hardian The Seventh	Peter Luke	French
Hamlet	Shakespeare	Various Publishers
Harvey	Mary Chase	Dram. Play Serv.
Hasty Heart, The	John Patrick	Dram. Play Serv.
He Who Gets Slapped	Leonid Andreyev	French
Hedda Gabler	Henrik Ibsen	Various Publishers
Heiress, The	Ruth and Augustus Gotez	Dram. Play Serv.
House of Bernarda Alba, The	Federico Garcia Lorca	French
Huckelberry Finn	Mark Twain	Various Publishers
I Remember Mama	John van Druten	Dram. Play Serv.
Imaginary Invalid, The	Moliere	Various Publishers
Importance of Being Earnest, The	Oscar Wilde	Various Publishers
Indian Captive	Lois Lenski	Coach House Press
Indian Captive, The	Charlotte Chorpenning	Anchorage Press
Inherit the Wind	Jerome Lawrence and Robert E. Lee	French
Innocents, The	William Archibald	French
J. B.	Archibald MacLeish	French
Joan of Lorraine	Maxwell Anderson	Dram. Play Serv.
Johnny Moonbeam and the Silver Arrow	Joseph Golden	Anchorage Press
Julius Caesar	Shakespeare	Various Publishers
King Lear	Shakespeare	Various Publishers
King Richard III	Shakespeare	Various Publishers
Knight of the Burning Pestle	Francis Beaumont	Various Publishers
Land of the Dragon, The	Madge Miller	Anchorage Press
Lark, The	Jean Anouilh	Dram. Play Serv.
Life With Father	Howard Lindsey and Russell Crouse	Dram. Play Serv.
Liliom	Ferenc Molnar	French
Lillies of the Field, The	William E. Barrett	Dram. Play Serv.
Little Foxes, The	Lilliam Hellman	Dram. Play Serv.
Little Red Riding Hood	Charlotte Chorpenning	Anchorage Press
Little Women	Various Dramatizations	Various Publishers
Look Homeward, Angel	Ketti Frings	French
Lute Song	Will Irwin and Sidney Howard	Dram. Pub. Co.
Luther	John Osborn	Dram. Pub. Co.

Title	*Author*	*Publisher*
Macbeth	Shakespeare	Various Publishers
Madwoman of Chaillot, The	Jean Giraudoux	Dram. Play Serv.
Major Barbara	G. B. Shaw	Various Publishers
Man Called Peter, A	John McGreevey	Dram. Play Serv.
Man For all Seasons, A	Robert Bolt	French
Man Who Killed Time, The	Arthur Fauquez	Anchorage Press
Man Who Married a Dumb Wife, The	Anatole France	Baker
Mary of Scotland	Maxwell Anderson	French
Mary Stuart	Friedrich von Schiller	Various Publishers
Me, Candido	Walt Anderson	Dram. Play Serv.
Medea	Euripides	Various Publishers
Medea	Robinson Jeffers	French
Merchant of Venice, The	Shakespeare	Various Publishers
Midsummer Night's Dream, A	Shakespeare	Various Publishers
Miracle Worker, The	William Gibson	French
Misanthrope, The	Moliere	Various Publishers
Miser, The	Moliere	Various Publishers
Mother Courage and Her Children	Bertolt Brecht	French
Mrs. McThing	Mary Chase	Dram. Play Serv.
Mr. Pim Passes By	A. A. Milne	French
Murder in the Cathedral	T. S. Eliot	French
My Heart's in the Highlands	William Saroyan	French
My Sister Eileen	Joseph Fields and Jerome Chodorov	Dram Play Serv.
Niccolo and Nicolette	Alan Cullen	Anchorage Press
Night Must Fall	Emlyn Williams	French
1984	George Orwell	Dram. Pub. Co.
Noah	Andre Obey	French
Oedipus The King	Sophocles	Various Publishers
Othello	Shakespeare	Various Publishers
Of Mice and Men	John Steinbeck	Dram. Play Serv.
Ondine	Jean Giraudoux	French
Our American Cousin	Tom Taylor	Various Publishers
Our Hearts Were Young and Gay	Jean Kerr	Dram. Pub. Co.
Peer Gynt	Henrik Ibsen	Various Publishers
Pegora The Witch	Carol L. Wright	Anchorage Press
Pinocchio	Various Dramatizations	Various Publishers
Playboy of the Western World	J. M. Sygne	French
Pocohontas	Aurand Harris	Anchorage Press
Prologue to Glory	E. P. Conkle	French
Pygmalion	G. B. Shaw	Various Publishers
Rags To Riches	Aurand Harris	Anchorage Press
Rainmaker, The	N. Richard Nash	French
Raisin in the Sun, A	Lorraine Hansberry	French
Ralph Roister Doister	Nicholas Udall	Various Publishers
Red Shoes, The	Hans Christian Anderson	French
Red Shoes, The	Hans Josef Schmidt	Coach House Press

Title	*Author*	*Publisher*
Reynard the Fox	Arthur Fauquez	Anchorage Press
Richard II	Shakespeare	Various Publishers
Rivals, The	Richard Brinsley Sheridan	Various Publishers
Robe, The	John McGreevey	Dram. Pub. Co.
Romancers, The	Edmond Rostand	French
Romeo and Juliet	Shakespeare	French
Roomful of Roses, A	Edith Sommer	Dram. Play Serv.
Royal Gambit	Herman Gressieker	French
Rumplestiltskin	Various Dramatizations	Various Publishers
Saint Joan	G. B. Shaw	French
Schools for Husbands, The	Moliere	Various Publishers
School for Scandal	Richard Brinsley Sheridan	Various Publishers
Secret of Han Ho, The	Margery Evernden	Coach House Press
Servant of Two Masters, A	Carlo Goldoni	Various Publishers
She Stoops to Conquer	Oliver Goldsmith	Various Publishers
Sleep of Prisoners, A	Christopher Fry	Dram. Play Serv.
Snow Queen, The	Hans Christian Anderson	Various Publishers
Song of Bernadette, The	Franz Werfel's and Jean and Walter Kerr	Dram. Pub. Co.
Staring Match, The	Jerry McNeely	Dram. Play Serv.
Taming of the Shrew, The	Shakespeare	Various Publishers
Tartuffe	Moliere	Various Publishers
Teahouse of the August Moon, The	John Patrick	Dram. Play Serv.
Tempest, The	Shakespeare	Various Publishers
Tevya and His Daughters	Arnold Perl	Dram. Play Serv.
Thieves' Carnival	Joan Anouilh	French
Thousand Clowns, A	Herb Gardner	French
Time Out for Ginger	Ronald Alexander	Dram. Play Serv.
Tom Sawyer	Mark Twain	Various Publishers
Torch-Bearers, The (Acts 1 and 3)	George Kelly	Various Publishers
Trojan Women, The	Euripides	Various Publishers
Twelth Night	Shakespeare	Various Publishers
Two Pails of Water	Aad Greidanus	Anchorage Press
Under the Sycamore Tree	Samuel Spewack	Dram. Play Serv.
Unwicked Witch, The	Madge Miller	Anchorage Press
Victoria Regina	Laurence Housman	Baker
Volpone	Ben Jonson	Various Publishers
Witche's Lullaby, The	Martha B. King	Coach House Press
Waiting for Godot	Samuel Beckett	Dram. Play Serv.
Winterset	Maxwell Anderson	Dram. Play Serv.
Wonderful Adventures of Don Quixote, The	Conrad Seiler	Dram. Play Serv.
Would-Be Gentlemen, The	Moliere	Various Publishers

Ineligible Plays

The following plays are not eligible for the University Interscholastic League One-Act Play Contest:

Afraid of the Dark
American Dream, The

Balcony Scene
Bathroom Door, The
Blue Beads
Blue Stockings
Blue Teapot, The
Breaking of Bread, The
Brick and the Rose, The
Butch

Candy Goes on a Diet
Circus
Claw, The
Construction
Crippled Heart, The
Cry Witch
Cup of Tea, A
Curtain

Dark at the Top of the Stairs, The–Act III
Dark Rider
Darkest Hour, The

Early Frost
Echo
Enchanted Night
Evening Star

Finders Keepers
First Mrs. Paris, The
Fog on the Valley
Fumed Oak
Four Hundred Nights
Four on a Heath

Glorified Brat, The
Golden Slippers
Great Choice
Great Jeanne
Gray Bread

Hello Out There
High Window
Hour of Honor

In the Suds
Infanta

Joan the Maid
Jacob Comes Home

Last Flight Over
Leader, The
Legend of the Lake
Lithuania
Life With Willie
Long Silence, The
Love Hits Willie

Masque of the Red Death
Minor Miracle
Mr. Snoop Is Murdered

No Greater Love

Once a Thief
Once Around the Block
Overpraised Season, An
Overruled

Perfect Gentleman, The
Pink and Patches
Portrait of Nelson Holiday, Jr.
Professor Roars, The

Room, The
Ruffles and Roller Skates

Salome
Sidetracted
Silver Cord, The–Act III
Sod
So Wonderful!(In White)
Sorry, Wrong Number
Special Guest

Spoon River Anthology
Submerged
Storm, The
Sugar and Spice

Thompsons, The
Thrre on a Bench
Tree Fell in the Forest, A
True in Heart, The

Undercurrent

Wall, The
Wheat Fire
When Shakespeare's Ladies Meet
Which Is the Way to Boston?
White Dove, The
White Dresses
White Tablecloths
Wilbur (All plays)
Wildcat Willie (All plays)

Zoo Story, The

The Drama Loan Library

The Drama Loan Library is maintained primarily to assist Texas play directors in the selection of their scripts. The library contains approximately 25,000 volumes and includes most of the long and short plays of the recommended publishers. They may be borrowed by any faculty member of a Texas school system for a period of two weeks. The borrower's school is held responsible for all borrowed materials. Additional materials will not be available until the original order is properly cleared. With each package is a sheet of instructions concerning the handling of the materials.

Perhaps the best way to choose reading copies of plays is to secure catalogues of the recommended publishers, and after reading their descriptions, request from the Drama Loan Library those titles which seem to fit your cast and situation. The addresses of the recommended play publishers are found below. These publishers furnish free catalogues upon request. Reading copies of plays should be ordered by title and each order must be accompanied by a $.25 postage and handling fee.

Publishers

Anchorage Press, Cloverlot, Anchorage, Ky. 40223
Baker's Plays, 100 Summer Street, Boston, Mass. 02110
Coach House Press, 53 West Jackson Blvd., Chicago, Ill. 60604
Dramatic Publishing Co., 86 East Randolph Street, Chicago, Ill. 60601
Dramatists Play Service, Inc., 440 Park Ave. South, New York, N. Y. 10016
David McKay, 750 Third Ave. New York, N. Y. 10017
Samuel French, Inc., 25 West 45th Street, New York, N. Y. 10036
Stage Magic, Box 246, Schulenburg, Texas 78956

Approved Unit Set
of the
University Interscholastic League
One-Act Play Contest

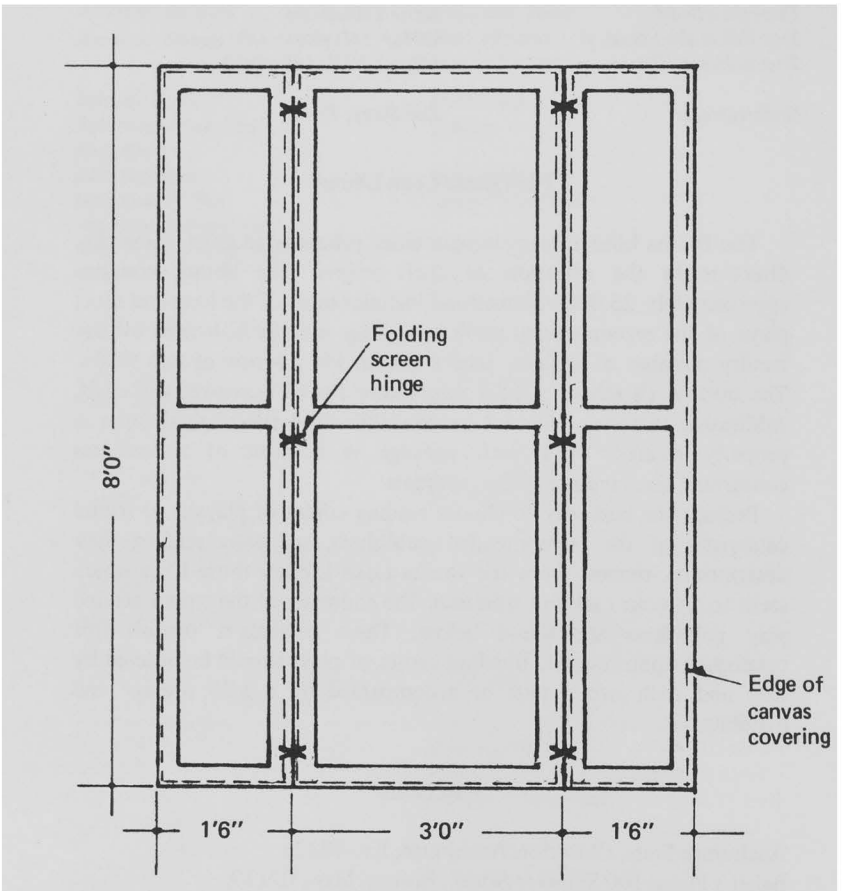

Three-fold Flats

Hinge together with folding screen hinges. Use 1" X 3" white pine lumber and heavy ducking or canvas for covering. Cover both sides. Build four (4) each.

For covering instructions, see the Bibliography for One-Act Play Directors in this HANDBOOK.

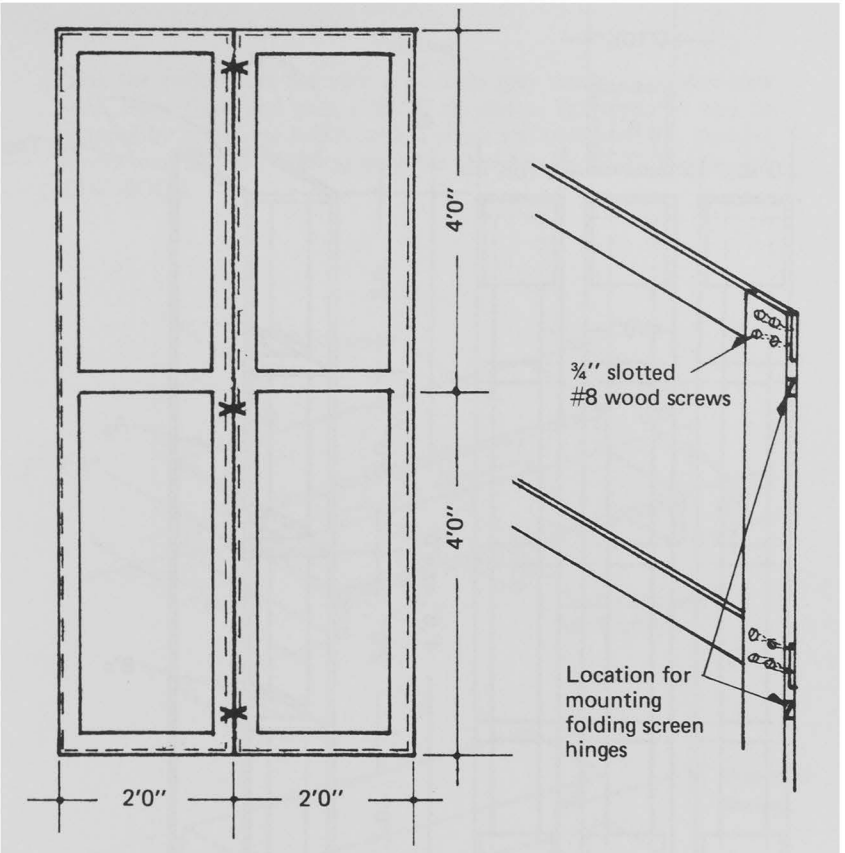

Two-fold Flats

Hinge together with folding screen hinges. Cover both sides of flats. Build four (4) each.

Corner Detail

Make ½" joints or lap joints. Put together with ¾" wood screws and Elmer's glue. Attach hinges with 1" #8 wood screws.

⋈-Folding screen hinges similar to Stanley model 875F, 1¾" long

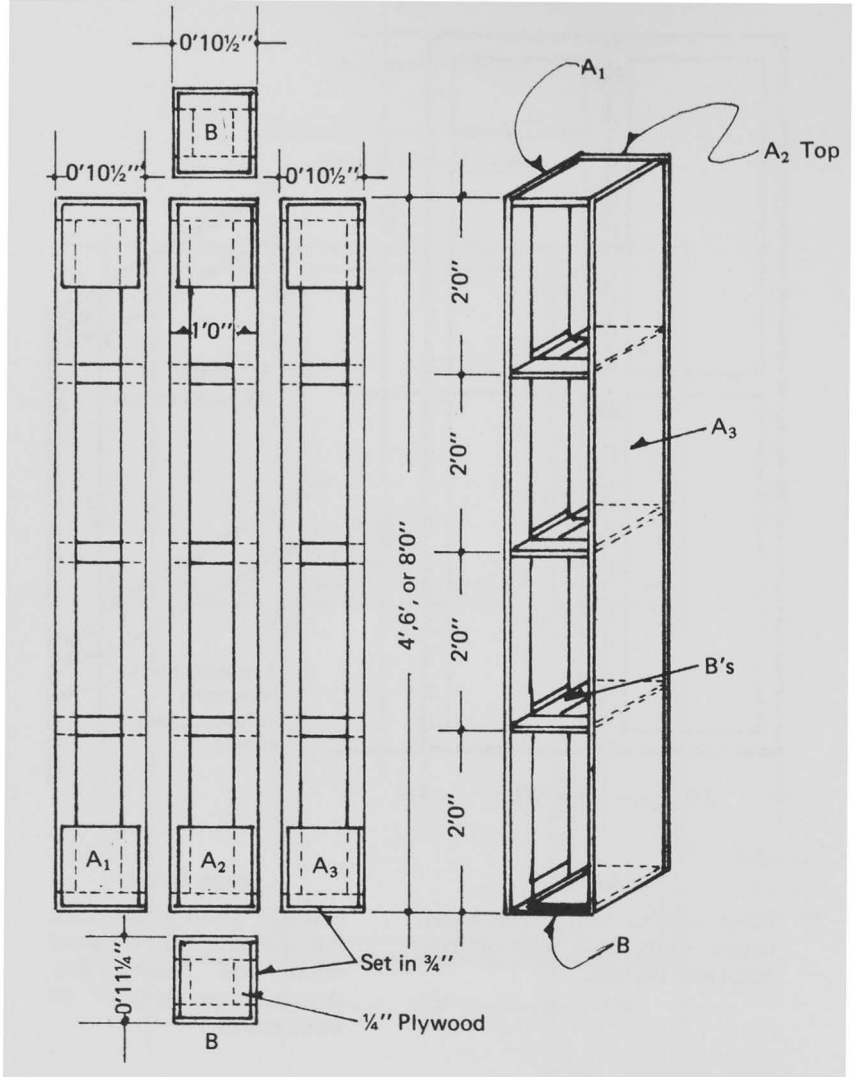

Pylons

Build like flats, using ½" joints.

Build two (2) 8'0"
(2) 6'0"
(2) 4'0"

Cover top of A_2 with ¼" plywood for sitting or standing on. Cover pylons with ducking. (Do not cover bottom side.)

Painting

Paint the entire Unit Set with a medium gray casein or rubber base paint. Paint front and back sides of all pieces. The Unit Set may be textured by spattering lightly with a warm and cool hue. For painting instructions, see the Bibliography for One-Act Play Directors in this HANDBOOK.

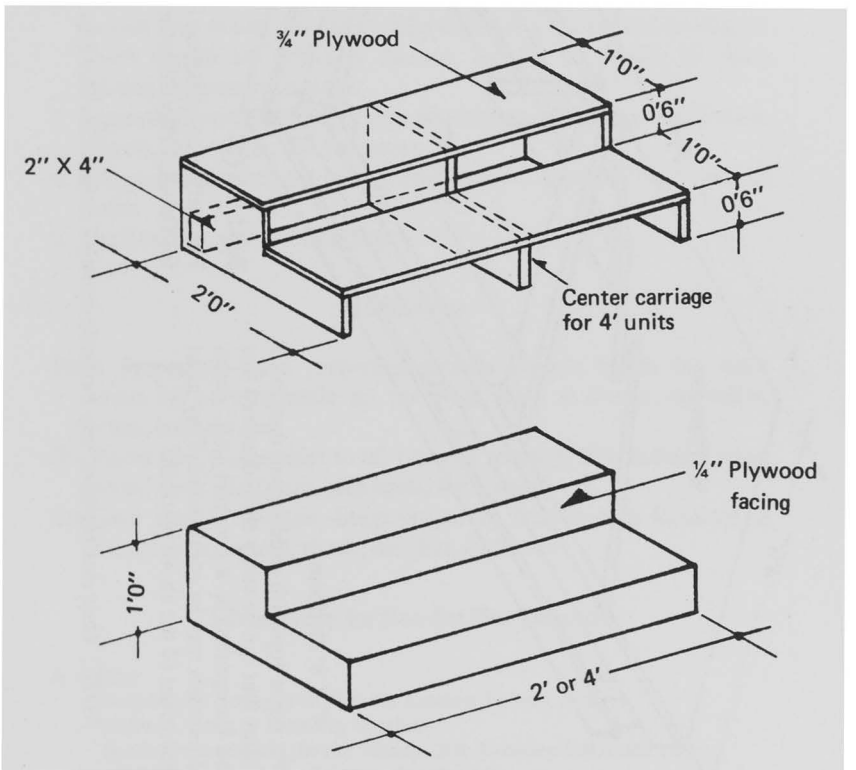

Step Units

Build two (2) sets 4'0" wide and
(2) sets 2'0" wide.
Finish construction by covering front, top, and end with ducking.

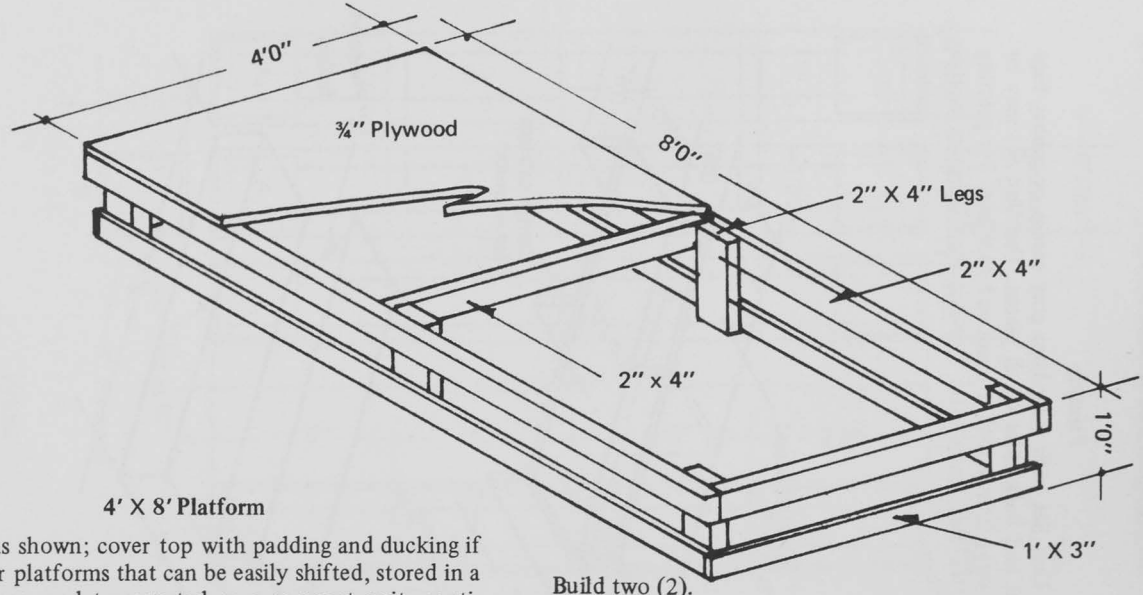

4' X 8' Platform

Construct as shown; cover top with padding and ducking if desired. For platforms that can be easily shifted, stored in a minimal space, and transported as a compact unit, continental or standard parallels may be constructed. They must conform to the dimensions of the above platform.

Build two (2).

For further construction instructions, see the Bibliography for One-Act Play Directors in this HANDBOOK.

NOTE: Only one Unit Set may be made available at each One-Act Play Contest.

Recommended Facilities

The League recommends the selection of a site which has a theatre type building with the following facilities:

1. An auditorium which includes a stage house with a proscenium opening not less than 30 feet wide and 18 feet high. Minimum stage depth from curtain line to back wall should be 18 feet. There should be an act curtain and sufficient scenery or draperies to mask backstage and offstage areas.
2. Dimmer controls for available lighting equipment which should include not fewer than eight ellipsoidal and six fresnel spotlights. There should be sufficient dimmer control to handle all other lighting equipment on stage.
3. Separate dressing rooms for men and women with adequate lighting, mirrors, rest rooms, and lavatories.
4. All properties and set pieces described in One-Act Play Contest Rules.
5. The League approved Unit Set.

Definitions

Hand Properties–Hand properties include objects which the actor carries on or uses while on the stage, such as books, umbrellas, letters, lanterns, etc.

Set Pieces–Set pieces refer to all types of scenery. This includes trees, ground rows, platforms, step units, flat scenery, etc.

Standard Stage Properties–Stage properties include such furniture as chairs, tables, settees, stools, benches, desks, etc.

Bibliography for One-Act Play Directors

1. Acting:
   Boleslavsky, *Acting, The First Six Lessons,* Theatre Arts
   McGaw, *Acting Is Believing,* Rinehart
   Spolin, *Inprovisation for the Theatre,* Northwestern University Press
   Stanislavsky, *An Actor Prepares,* Theatre Arts
2. Costume:
   Barton, *Historic Costume for the Stage,* Walter H. Baker
3. Directing:
   Dean, *Fundamentals of Directing,* Holt, Rinehart & Winston
   Dolman, *The Art of Play Production,* Harper
   Hodge, *Play Directing: Analysis, Communication, and Style,* Prentice-Hall

4. History:
   Brockett, *History of the Theatre,* Allyn and Bacon
   Brockett, *The Theatre an Introduction,* Holt, Rinehart & Winston
   Cheney, *The Theatre,* David McKay Co.
   Gassner, *Masters of the Drama,* Dover
   Macgowan & Melnitz, *The Living Stage,* Prentice-Hall
   Nicoll, *Development of the Theatre,* Harcourt, Brace
5. Make-Up:
   Corson, *Stage Make-Up,* Appleton
6. Production:
   Bowman, *Modern Theatre Lighting,* Harper Bros.
   Burris-Meyer & Cole, *Scenery for the Theatre,* Little, Brown
   Fuchs, *Stage Lighting,* Little, Brown
   Gassner, *Producing the Play,* Dryden
   Gillette, *Stage Scenery: Its Construction and Rigging,* Harper and Row
   Heffner, Selden, & Sellman, *Modern Theatre Practice,* Appleton-Century-Crofts
   McCandless, *A Method of Lighting the Stage,* Theatre Arts
   Ommanney & Scharker, *The Stage and School,* Harper & Row
   Parker & Smith, *Scene Design and Stage Lighting,* Holt, Rinehart, & Winston
   Philippi, *Stagecraft and Scene Design,* Houghton, Mifflin
   Selden & Sellman, *Stage Scenery and Lighting,* Appleton-Century-Crofts
7. Theatre Architecture:
   Burris-Meyer & Cole, *Theatres and Auditoriums,* Little, Brown
   Robinson, *Architecture for the Educational Theatre,* University of Oregon Press
8. Theatrical Equipment Directory:
   Simon's Directory of Theatrical Materials, Package Publicity Service Inc., 1564 Broadway, N.Y. 10036

I think I love and reverence all arts equally, only putting my own just above the others; because in it I recognize the union and culmination of my own. To me it seems as if when God conceived the world, that was Poetry; He formed it, and that was Sculpture; He colored it, and that was Painting; He peopled it with living beings, and that was the grand, divine, eternal Drama.

Charlotte Cushman

For Further Information Write:

STATE DRAMA DIRECTOR
UNIVERSITY INTERSCHOLASTIC LEAGUE
Box 8028, University Station
Austin, Texas 78712

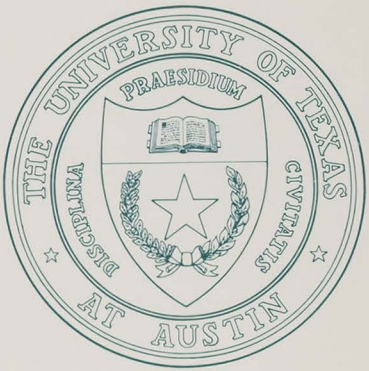
THE UNIVERSITY OF TEXAS
AT AUSTIN
PRAESIDIUM
DISCIPLINA
CIVITATIS